CURB RAMP GENERAL NOTES:

1. IN NEW CONSTRUCTION OR FULL-DEPTH RECONSTRUCTION, PROVIDE A SEPARATE CURB RAMP FOR EACH MARKED OR UNMARKED PEDESTRIAN STREET CROSSING. CURB RAMPS SHALL BE CONTAINED WHOLLY WITHIN THE WIDTH OF THE PEDESTRIAN STREET CROSSING OR CROSSWALK THEY SERVE, OR AS SHOWN ON THE CONTRACT PLANS.

2. ALTERATIONS ARE DEFINED AS CHANGES TO AN EXISTING HIGHWAY THAT AFFECT PEDESTRIAN ACCESS, CIRCULATION, OR USE. ALTERATIONS INCLUDE, BUT ARE NOT LIMITED TO, RESURFACING, REHABILITATION, RECONSTRUCTION, CURB RAMP RETROFITS, HISTORIC RESTORATION, OR CHANGES OR REARRANGEMENT TO STRUCTURAL PARTS OR ELEMENTS OF A PEDESTRIAN FACILITY.

3. A WALKABLE SURFACE IS DEFINED AS A PAVED SURFACE ADJACENT TO A CURB RAMP OR TURNING SPACE, WITHOUT RAISED OBSTACLES, THAT COULD BE MISTAKENLY TRAVERSED BY A USER WHO IS VISUALLY IMPAIRED.

4. IN ALTERATIONS, WHERE AN EXISTING PHYSICAL CONSTRAINT PREVENTS PROVIDING A SEPARATE CURB RAMP FOR EACH PEDESTRIAN STREET CROSSING, A SINGLE DIAGONAL RAMP (ON THE APEX) SHALL BE PERMITTED TO SERVE BOTH PEDESTRIAN STREET CROSSINGS. THE USE OF A SINGLE DIAGONAL RAMP SHALL BE APPROVED BY THE ENGINEER PRIOR TO CONSTRUCTION. DIAGONAL RAMPS ARE NOT ACCEPTABLE IN NEW CONSTRUCTION OR FULL-DEPTH RECONSTRUCTION.

5. DETECTABLE WARNINGS SURFACES (DWS) ARE INTENDED TO INDICATE THE BOUNDARY BETWEEN A PEDESTRIAN ROUTE AND VEHICULAR ROUTE WHERE THERE IS A FLUSH RATHER THAN CURBED CONNECTION. DWS ARE NOT INTENDED TO PROVIDE WAYFINDING. DWS SHALL BE PROVIDED AT THE FOLLOWING LOCATIONS;
   1. CURB RAMPS, BLENDED TRANSITIONS, AND DEPRESSED CORNERS AT PEDESTRIAN STREET CROSSINGS;
   2. PEDESTRIAN REFUGE ISLANDS (6 FEET IN WIDTH OR GREATER);
   3. BOARDING PLATFORMS AT TRANSIT STOPS WHERE THE EDGE OF THE PLATFORM IS NOT PROTECTED TO PEDESTRIAN CROSS TRAFFIC; AND
   4. BOARDING AREAS AT SIDEWALK OR STREET LEVEL TRANSIT STOPS WHERE THE AREA IS NOT PROTECTED TO PEDESTRIAN CROSS TRAFFIC.

6. DETECTABLE WARNING SURFACES SHALL CONTRAST VISUALLY WITH THE ADJACENT GUTTER, HIGHWAY, OR PEDESTRIAN ACCESS ROUTE SURFACE, EITHER LIGHT-ON-DARK OR DARK-ON-LIGHT. FEDERAL YELLOW COLOR IS PREFERRED, HOWEVER, OTHER COLORS MAY BE USED IF APPROVED BY THE ENGINEER.

7. IN ALTERATIONS, TO AVOID CHASING GRADE INDEFINITELY ON STEEP ROADWAYS, A CURB RAMPS LENGTH IS NOT REQUIRED TO EXCEED 15 FEET REGARDLESS OF THE RESULTING RAMP RUNNING SLOPE.

8. ALL SLOPES ARE MEASURED WITH RESPECT TO A LEVEL PLANE.

9. DRAINAGE STRUCTURES, TRAFFIC SIGNAL EQUIPMENT, OR OTHER OBSTRUCTIONS SHALL NOT BE INSTALLED ON THE CURB RAMP, OR TURNING SPACE AREAS.

10. IN NEW CONSTRUCTION, PULL BOXES, METER BOXES, MAINTENANCE HOLE COVERS, VAULT LIDS, OR SIMILAR, SHALL NOT BE CONSTRUCTED WITHIN ANY PART OF CURB RAMP OR TURNING SPACE. IN ALTERATIONS, WHERE THESE ITEMS CANNOT BE RELOCATED OUTSIDE OF THE CURB RAMP OR TURNING SPACE, THEY MUST NOT CREATE A VERTICAL DISCONTINUITY GRATER THAN 1/2 INCH. ANY VERTICAL DISCONTINUITY BETWEEN 1/4 INCH AND 1/2 INCH SHALL BE BEVELED WITH A SLOPE NOT STEEPER THAN 1V:2H. THE BEVEL SHALL BE APPLIED ACROSS THE ENTIRE SURFACE DISCONTINUITY.

11. CONSTRUCTION OF ANY REQUIRED PEDESTRIAN CURB SHALL BE INCLUDED IN THE BID PRICE OF THE CONCRETE CURB RAMP AND WILL NOT BE PAID FOR SEPARATELY.

12. ALL CURB RAMP JOINTS AND GRADE BREAKS SHALL BE FLUSH (0'-1/8"). THE JOINT BETWEEN THE ROADWAY SURFACE AND THE GUTTER PAN SHALL BE FLUSH.

13. THE CONTRACTOR SHALL VERIFY REMOVAL LIMITS ARE SUFFICIENT TO PROVIDE POSITIVE DRAINAGE, MAINTAIN EXISTING DRAINAGE PATTERNS, AND AVOID PONDING IN THE FINAL CONFIGURATION.

14. FLARED SIDE SLOPES MAY EXCEED 10.0% ONLY WHERE THEY ABUT A NON-WALKABLE SURFACE, OR WHERE THE ADJACENT RAMP SURFACE IS BLOCKED TO PEDESTRIAN TRAFFIC.

15. THE CHANGE IN GRADE AT THE BOTTOM OF THE CURB RAMP SHALL NOT EXCEED AN ALGEBRAIC DIFFERENCE OF 13.33%. THE COUNTER SLOPE OF THE GUTTER AT THE FOOT OF A RAMP, TURNING SPACE, OR BLENDED TRANSITION SHALL NOT EXCEED 5.0%.

16. GRADE BREAKS AT THE TOP AND BOTTOM OF RAMP RUNS SHALL BE PERPENDICULAR TO THE DIRECTION OF THE RAMP RUN. GRADE BREAKS SHALL NOT BE PERMITTED ON THE SURFACE OF THE RAMP RUN OR TURNING SPACE. SURFACE SLOPES THAT MEET AT GRADE BREAKS SHALL BE FLUSH.

17. A BROOM FINISH, WITH SWEEPS PERPENDICULAR TO THE DIRECTION OF PEDESTRIAN TRAFFIC, SHALL BE APPLIED TO ALL RAMP AND TURNING SPACE SURFACES.

18. IN ALTERATIONS, WHERE A RAMP OR TURNING SPACE MUST TIE INTO AN EXISTING GRADE THAT CANNOT BE ALTERED, THE RAMP OR TURNING SPACE MAY BE WARPED TO TRANSITION TO THE REQUIRED CROSS SLOPE. THE TRANSITION TO THE REQUIRED CROSS SLOPE SHALL BE SPREAD EVENLY OVER THE LENGTH OF THE RAMP OR TURNING SPACE TO MINIMIZE THE DEGREE OF WARPING. THE RATE OF CHANGE ON A RAMP OR TURNING SPACE SHALL NOT EXCEED 3% PER LINEAR FOOT.

19. DESIGN AND CONSTRUCT CURB RAMPS, TURNING SPACES, AND FLARE SLOPES WITH THE FLATTEST SLOPES POSSIBLE. THE SLOPES INDICATED IN THESE DETAILS SHOW THE MAXIMUM SLOPES ALLOWABLE. **PREFERRED VALUES** TO BE USED DURING DESIGN, LAYOUT, AND CONSTRUCTION ARE:
   - **RAMP RUNNING SLOPE 7.5%**
   - **RAMP CROSS SLOPE 1.5%**
   - **TURNING SPACE RUNNING SLOPE 1.5%**
   - **TURNING SPACE CROSS SLOPE 1.5%**
   - **FLARE SLOPE 8.0-9.0%**

20. WHERE SNOW REMOVAL EQUIPMENT WILL BE USED TO CLEAR THE PEDESTRIAN ACCESS ROUTE, CONSULT THE ENGINEER PRIOR TO CONSTRUCTION TO ENSURE THE WIDTH AND THICKNESS OF CURB RAMPS IS SUFFICIENT TO ACCOMODATE SUCH EQUIPMENT.

21. PROVIDE EXPANSION JOINT MATERIAL 1/2" THICK WHERE CURB RAMPS ADJOIN ANY RIGID PAVEMENT, OR STRUCTURE. THE TOP OF THE JOINT FILLER MATERIAL SHALL BE FLUSH WITH ADJOINING CONCRETE SURFACES. THE EXPANSION JOINT MATERIAL SHALL EXTEND FOR THE FULL DEPTH OF THE CONCRETE SURFACE.

22. PROVIDE TIE BAR REINFORCING BETWEEN INDEPEDENTLY POURED CONCRETE CURB RAMPS OR TURNING SPACES AND CURB AND GUTTER. DRILL AND GROUT NO. 4 12 INCH LONG REINFORCEMENT BARS (EPOXY COATED) AT 18 INCHES CENTER TO CENTER MINIMUM.

CURB RAMP PAY AREAS

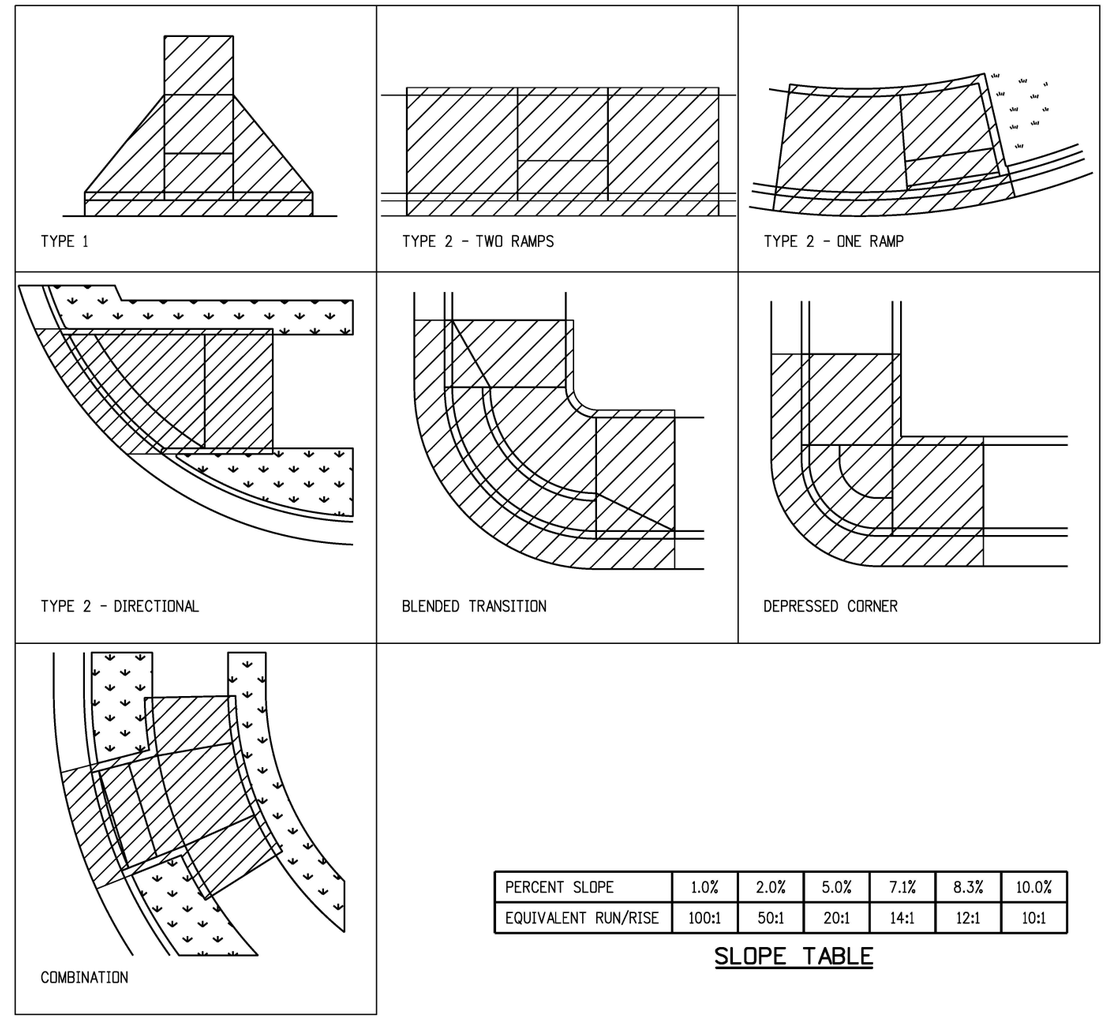

PERCENT SLOPE	1.0%	2.0%	5.0%	7.1%	8.3%	10.0%
EQUIVALENT RUN/RISE	100:1	50:1	20:1	14:1	12:1	10:1

SLOPE TABLE

GENERAL NOTES & PAY AREAS

Computer File Information	
Creation Date: 07/31/19	
Designer Initials: JBK	(R-X)
Last Modification Date: 07/31/19	(R-X)
Detailer Initials: LTA	(R-X)
CAD Ver.: MicroStation V8 Scale: Not to Scale Units: English	(R-X)

Sheet Revisions	
Date:	Comments

Colorado Department of Transportation
2829 West Howard Place
CDOT HQ, 3rd Floor
Denver, CO 80204
Phone: 303-757-9021 FAX: 303-757-9868
Project Development Branch JBK

CURB RAMPS

Issued by the Project Development Branch: July 31, 2019

STANDARD PLAN NO.
M-608-1
Standard Sheet No. 1 of 10
Project Sheet Number:

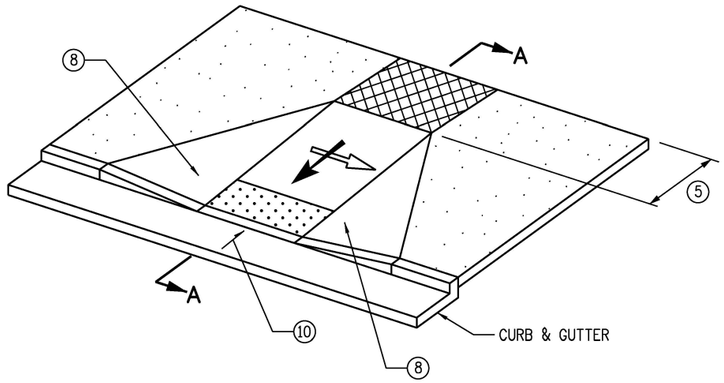

PERPENDICULAR RAMP
(TYPICAL)

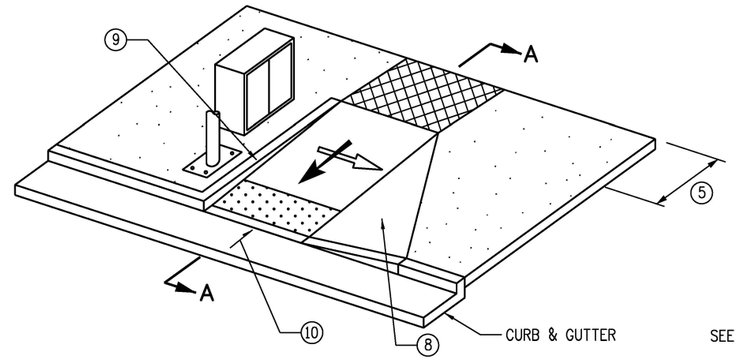

PERPENDICULAR RAMP
(WITH VERTICAL RETURN CURB)

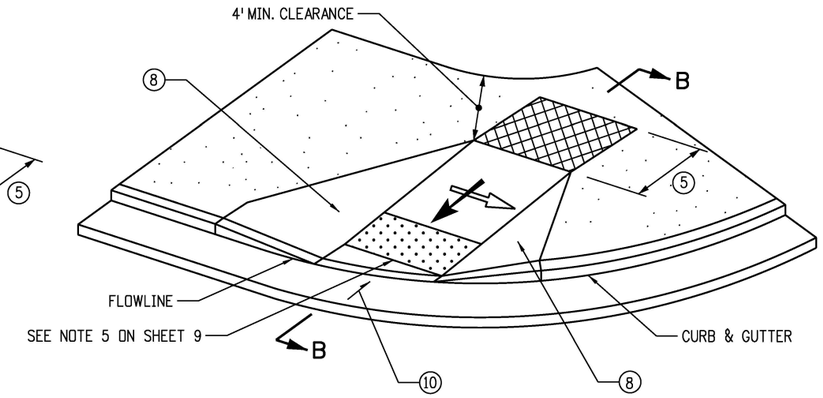

PERPENDICULAR RAMP
(DIRECTIONAL)

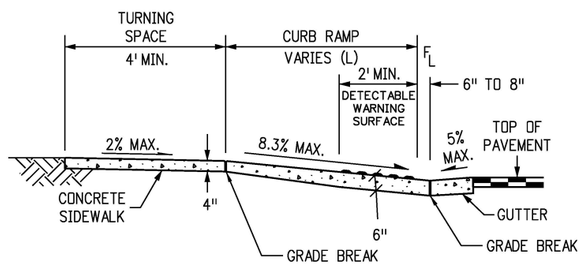

SECTION A-A

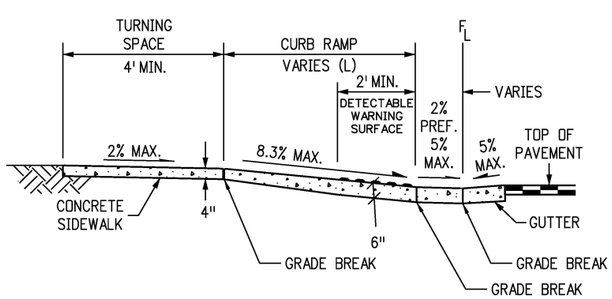

SECTION B-B

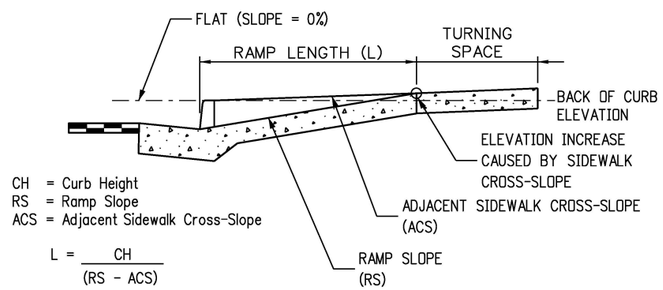

CH = Curb Height
RS = Ramp Slope
ACS = Adjacent Sidewalk Cross-Slope

$$L = \frac{CH}{(RS - ACS)}$$

EXAMPLE: CH = 6" (0.5 ft.), RS = 7.5% (0.075), ACS = 1.5% (0.015)
L = 0.5/(0.075-0.015) = 8.3 ft.

DETAIL A - RAMP LENGTH

SIDEWALK

TURNING SPACE (3) (4) (5)

DETECTABLE WARNING SURFACE (DWS)

PERPENDICULAR RAMP NOTES

(1) RAMP WIDTH - PROVIDE 5 FT. OR GREATER WHERE POSSIBLE. IF SITE CONSTRAINTS DO NOT PERMIT, PROVIDE 4 FT. MINIMUM. RAMPS SERVICING SHARED USE PATHS SHALL MATCH THE WIDTH OF THE PATH.

(2) RAMP RUNNING SLOPE - 8.3% MAX.

(3) TURNING SPACE RUNNING SLOPE - 2.0% MAX. TURNING SPACE RUNNING SLOPE IS MEASURED IN THE SAME DIRECTION AS THE RAMP RUNNING SLOPE.

(4) RAMP AND TURNING SPACE CROSS SLOPE - 2.0% TYPICAL. AT CROSSINGS WITHOUT YIELD OR STOP CONTROL, OR WITH A SIGNAL WHERE VEHICLES CAN PROCEED THROUGH THE INTERSECTION WITHOUT SLOWING OR STOPPING, THE CROSS SLOPE OF RAMPS AND TURNING SPACES MAY EQUAL THE HIGHWAY GRADE. AT MIDBLOCK PEDESTRIAN STREET CROSSINGS THE RAMP AND TURNING SPACE CROSS SLOPE MAY EQUAL THE HIGHWAY GRADE.

(5) TURNING SPACE DIMENSIONS - PROVIDE A TURNING SPACE AT THE TOP OF PERPENDICULAR RAMPS WITH A WIDTH EQUAL TO THE WIDTH OF THE CURB RAMP. TURNING SPACE LENGTH MUST BE 4 FT. MINIMUM, MEASURED IN THE DIRECTION OF THE RAMP RUN. WHEN A TURNING SPACE IS CONSTRAINED AT THE BACK OF SIDEWALK, INCREASE LENGTH TO 5 FT. MINIMUM IN THE DIRECTION OF THE RAMP RUN.

(6) RAMP ALIGNMENT - RAMPS SHALL BE ALIGNED TO BE FULLY CONTAINED WITHIN THE CROSSWALK OR STREET CROSSING THEY SERVE. PROVIDE ONE RAMP FOR EACH STREET CROSSING DIRECTION. IN ALTERATIONS, WHERE EXISTING PHYSICAL CONSTRAINTS PREVENT PROVIDING ONE CURB RAMP FOR EACH CROSSING DIRECTION, A SINGLE DIAGONAL CURB RAMP (ON THE APEX OF A CORNER) SHALL BE PERMITTED TO SERVE BOTH PEDESTRIAN STREET CROSSINGS. IF A DIAGONAL RAMP IS USED, A CLEAR SPACE 4 FT. X 4FT. MUST BE PROVIDED AT THE BASE OF THE RAMP. THE CLEAR SPACE MUST BE WITHIN BOTH CROSSWALKS AND WHOLLY OUTSIDE OF ANY ADJACENT VEHICULAR TRAVEL LANES. DIAGONAL RAMPS ARE NOT ACCEPTABLE IN NEW CONSTRUCTION, OR FULL-DEPTH RECONSTRUCTION.

(7) RAMP LENGTH - PERPENDICULAR RAMP LENGTH IS DEPENDENT UPON THE RAMP SLOPE, HEIGHT OF CURB, AND ADJACENT SIDEWALK CROSS-SLOPE WHICH MUST BE INTERCEPTED. SEE DETAIL A FOR CALCULATING RAMP LENGTH WHEN CHASING SIDEWALK CROSS-SLOPE. WHERE TERRAIN IS SLOPING A RAMP IS NOT REQUIRED TO CHASE GRADE MORE THAN 15 FT. REGARDLESS OF THE RESULTING RAMP SLOPE.

(8) RAMP FLARES - WHERE A RAMP EDGE ABUTS A WALKABLE SURFACE, A FLARED SIDE SHALL BE PROVIDED. RAMP FLARE SLOPES SHALL NOT EXCEED 10.0%.

(9) VERTICAL CURB RETURNS - VERTICAL CURB RETURNS MAY BE USED ONLY WHERE A RAMP ABUTS A NON-WALKABLE SURFACE, OR WHERE A RAMP IS PROTECTED FROM PEDESTRIAN CROSS TRAFFIC (FOR EXAMPLE BY A SIGNAL CABINET OR UTILITY POLE WHICH BLOCKS PASSAGE).

(10) GUTTER COUNTER SLOPE - 5.0% MAX.

TYPE 1 PERPENDICULAR CURB RAMPS

Computer File Information	
Creation Date: 07/31/19	
Designer Initials: JBK	(R-X)
Last Modification Date: 07/31/19	(R-X)
Detailer Initials: LTA	(R-X)
CAD Ver.: MicroStation V8 Scale: Not to Scale Units: English	(R-X)

Sheet Revisions	
Date:	Comments

Colorado Department of Transportation
2829 West Howard Place
CDOT HQ, 3rd Floor
Denver, CO 80204
Phone: 303-757-9021 FAX: 303-757-9868
Project Development Branch JBK

CURB RAMPS

Issued by the Project Development Branch: July 31, 2019

STANDARD PLAN NO.
M-608-1
Standard Sheet No. 2 of 10
Project Sheet Number:

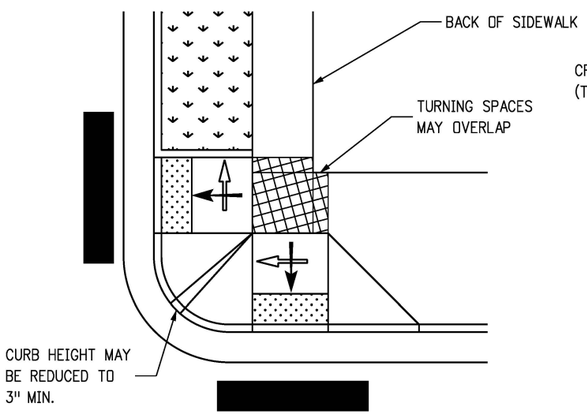

TYPE 1 RAMPS FOR WIDE SIDEWALK
(3" REDUCED CURB)

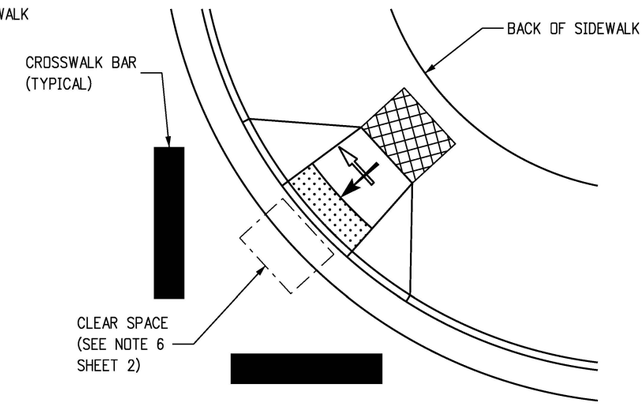

TYPE 1 RAMP
(DIAGONAL)

NOT ALLOWABLE IN NEW CONSTRUCTION/FULL DEPTH RECONSTRUCTION
SEE GENERAL NOTE 4

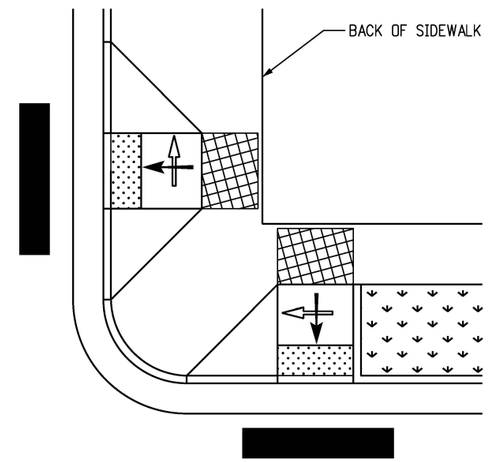

TYPE 1 RAMPS FOR WIDE SIDEWALK

TURNING SPACE
(SEE NOTES 3, 4, 5 - SHEET 2)

DETECTABLE WARNING SURFACE (DWS)
SEE DWS SHEETS FOR PLACEMENT DETAILS

RAMP RUNNING SLOPE

RAMP CROSS SLOPE

NOTE

PLACEMENTS SHOWN ARE TYPICAL CONFIGURATIONS ONLY AND NOT INDICATIVE OF ALL OPTIONS. OTHER RAMP CONFIGURATIONS MAY BE ACCEPTABLE AS LONG AS THEY CONFORM TO THE CRITERIA IN THESE STANDARDS, AND ARE APPROVED BY THE ENGINEER.

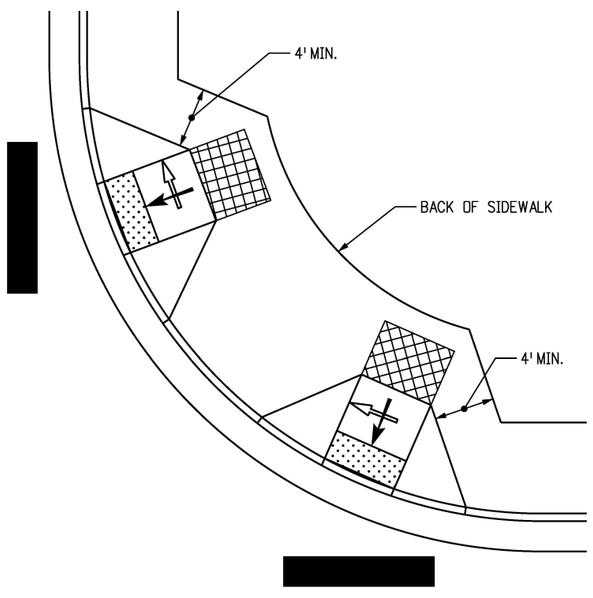

TYPE 1 PERPENDICULAR RAMPS

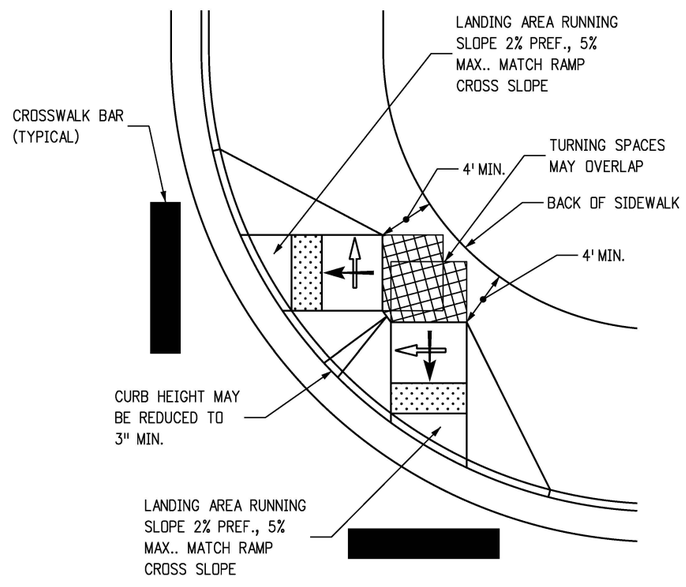

TYPE 1 DIRECTIONAL RAMPS
(3" REDUCED CURB)

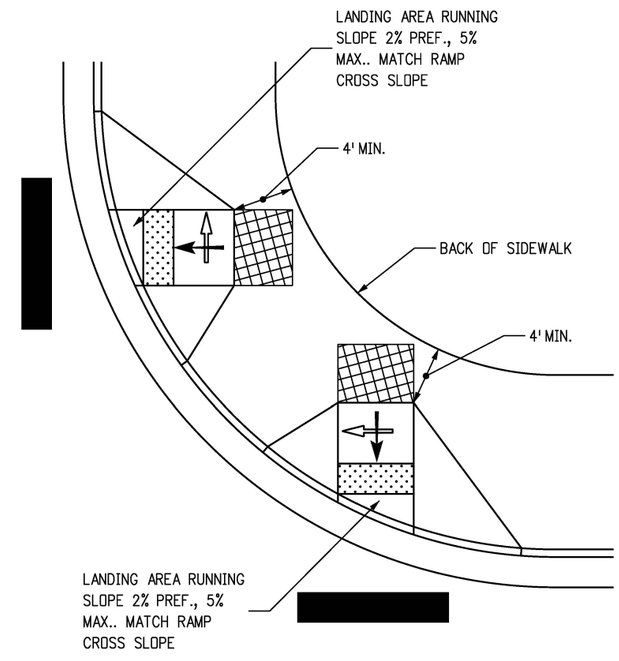

TYPE 1 DIRECTIONAL RAMPS
(LARGE RADIUS)

TYPE 1 CURB RAMPS TYPICAL CONFIGURATIONS

Computer File Information		Sheet Revisions	
Creation Date: 07/31/19		Date:	Comments
Designer Initials: JBK	R-X		
Last Modification Date: 07/31/19	R-X		
Detailer Initials: LTA	R-X		
CAD Ver.: MicroStation V8 Scale: Not to Scale Units: English	R-X		

Colorado Department of Transportation
2829 West Howard Place
CDOT HQ, 3rd Floor
Denver, CO 80204
Phone: 303-757-9021 FAX: 303-757-9868
Project Development Branch JBK

CURB RAMPS

Issued by the Project Development Branch: July 31, 2019

STANDARD PLAN NO.
M-608-1
Standard Sheet No. 3 of 10
Project Sheet Number:

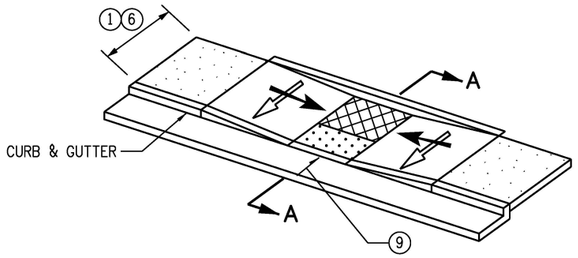

PARALLEL RAMP
(TYPICAL)

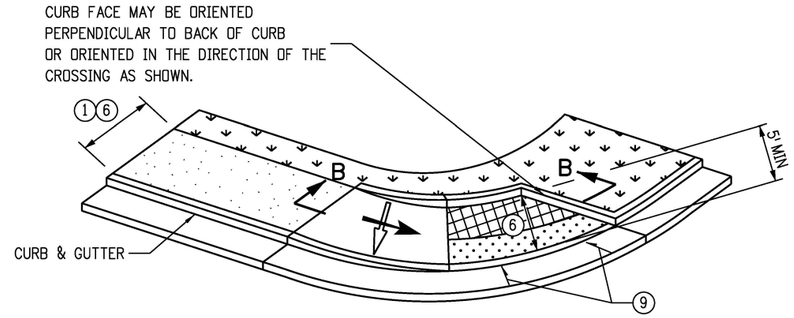

PARALLEL RAMP
(SIDEWALK ENDS)

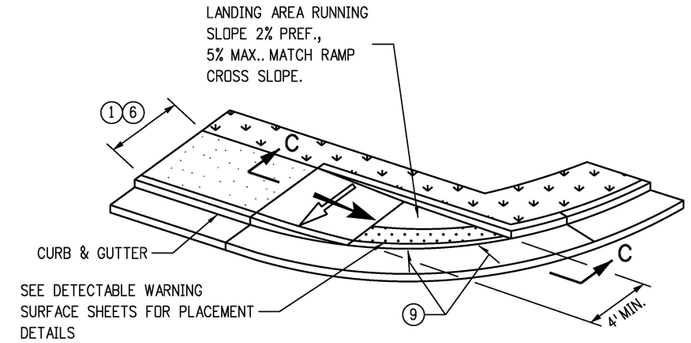

PARALLEL RAMP
(DIRECTIONAL - CROSSING IN ONE DIRECTION ONLY)

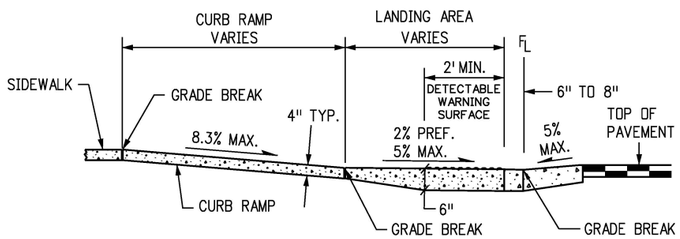

SECTION C-C

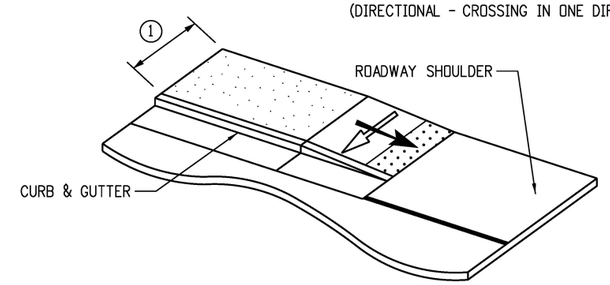

SIDEWALK TO SHOULDER TRANSITION

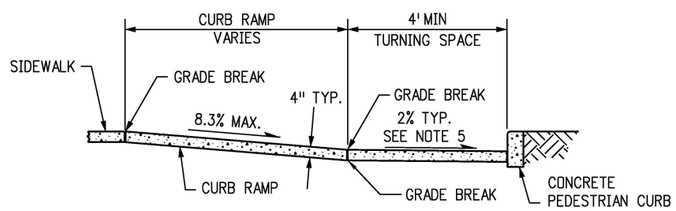

SECTION B-B

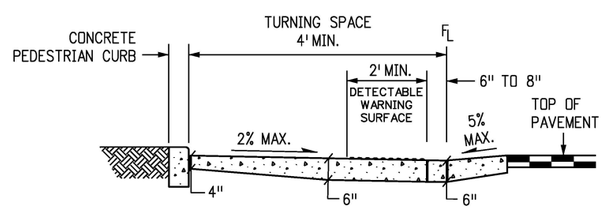

SECTION A-A

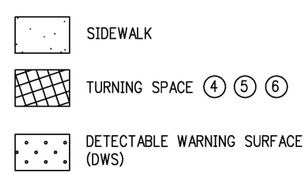

TYPE 2 PARALLEL CURB RAMPS

PARALLEL RAMP NOTES

1. RAMP WIDTH - PROVIDE A RAMP WIDTH EQUAL TO THE ADJOINING SIDEWALK, PROVIDE 4 FT. WIDTH MINIMUM. RAMPS SERVICING SHARED USE PATHS SHALL MATCH THE WIDTH OF THE PATH.
2. RAMP RUNNING SLOPE - 8.3% MAX.
3. RAMP CROSS SLOPE - 2.0% MAX.
4. TURNING SPACE RUNNING SLOPE - 2.0% MAX. TURNING SPACE RUNNING SLOPE IS MEASURED PERPENDICULAR TO THE BACK OF CURB.
5. TURNING SPACE CROSS SLOPE - 2.0% TYPICAL, AT CROSSINGS WITHOUT YIELD OR STOP CONTROL, OR WITH A SIGNAL WHERE VEHICLES CAN PROCEED THROUGH THE INTERSECTION WITHOUT SLOWING OR STOPPING, THE CROSS SLOPE OF THE TURNING SPACE MAY EQUAL THE HIGHWAY GRADE. AT MIDBLOCK PEDESTRIAN STREET CROSSINGS THE TURNING SPACE CROSS SLOPE MAY EQUAL THE HIGHWAY GRADE. TURNING SPACE CROSS SLOPE IS MEASURED IN THE DIRECTION OF THE RAMP RUN.
6. TURNING SPACE DIMENSIONS - PROVIDE A TURNING SPACE AT THE BOTTOM OF PARALLEL RAMPS WITH A WIDTH EQUAL TO THE WIDTH OF THE CURB RAMP. PROVIDE 4 FT. MINIMUM, MEASURED IN THE DIRECTION OF THE RAMP RUN. IF THE TURNING SPACE IS CONSTRAINED ON TWO SIDES, PROVIDE 5 FT. MEASURED IN THE DIRECTION OF PEDESTRIAN STREET CROSSING. THE TURNING SPACE MAY CONTAIN THE DETECTABLE WARNING SURFACE.
7. RAMP ALIGNMENT - RAMPS SHALL BE ALIGNED SO THE TURNING SPACE IS FULLY CONTAINED WITHIN THE CROSSWALK OR STREET CROSSING THEY SERVE. PROVIDE ONE RAMP FOR EACH STREET CROSSING DIRECTION. IN ALTERATIONS, WHERE EXISTING PHYSICAL CONSTRAINTS PREVENT PROVIDING ONE CURB RAMP FOR EACH CROSSING DIRECTION, A SINGLE DIAGONAL CURB RAMP (ON THE APEX OF A CORNER) SHALL BE PERMITTED TO SERVE BOTH PEDESTRIAN STREET CROSSINGS. DIAGONAL RAMPS ARE NOT ACCEPTABLE IN NEW CONSTRUCTION, OR FULL-DEPTH RECONSTRUCTION.
8. RAMP LENGTH - PARALLEL RAMP LENGTH IS DEPENDENT UPON THE RAMP SLOPE AND THE CHANGE OF ELEVATION FROM THE TURNING SPACE TO THE SIDEWALK. WHERE TERRAIN IS SLOPING A RAMP IS NOT REQUIRED TO CHASE GRADE MORE THAN 15 FT. REGARDLESS OF THE RESULTING RAMP SLOPE.
9. GUTTER COUNTER SLOPE - 5.0% MAX.

Computer File Information		Sheet Revisions	
Creation Date: 07/31/19		Date:	Comments
Designer Initials: JBK	R-X		
Last Modification Date: 07/31/19	R-X		
Detailer Initials: LTA	R-X		
CAD Ver.: MicroStation V8 Scale: Not to Scale Units: English	R-X		

Colorado Department of Transportation
2829 West Howard Place
CDOT HQ, 3rd Floor
Denver, CO 80204
Phone: 303-757-9021 FAX: 303-757-9868
Project Development Branch JBK

CURB RAMPS

Issued by the Project Development Branch: July 31, 2019

STANDARD PLAN NO.
M-608-1
Standard Sheet No. 4 of 10
Project Sheet Number:

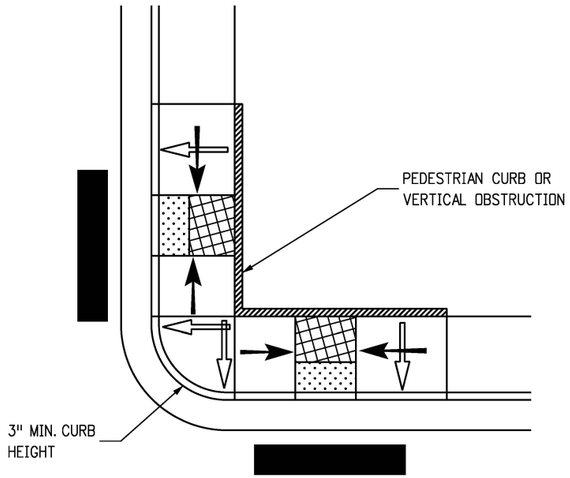

TYPE 2 RAMPS SMALL RADIUS
(3" REDUCED CURB)

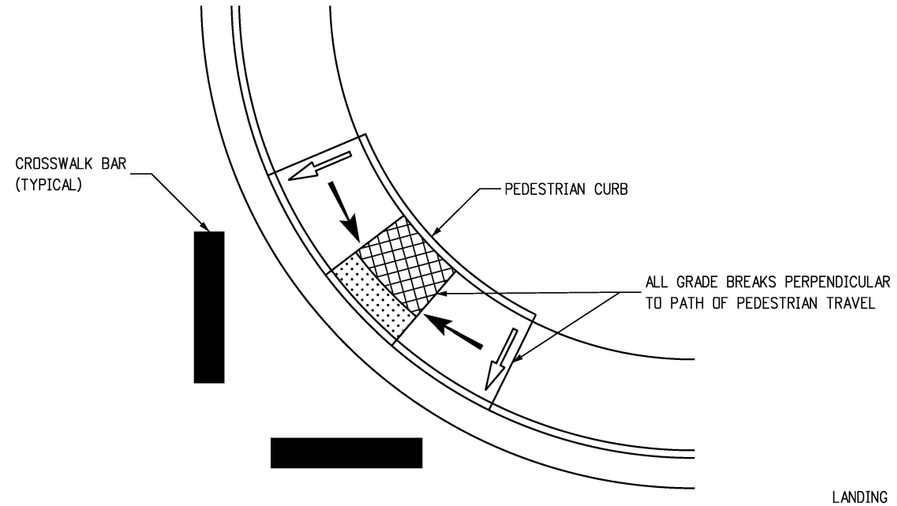

TYPE 2 RAMP (DIAGONAL)
NOT ALLOWABLE IN NEW CONSTRUCTION/FULL-DEPTH RECONSTRUCTION
SEE NOTE GENERAL NOTE 4

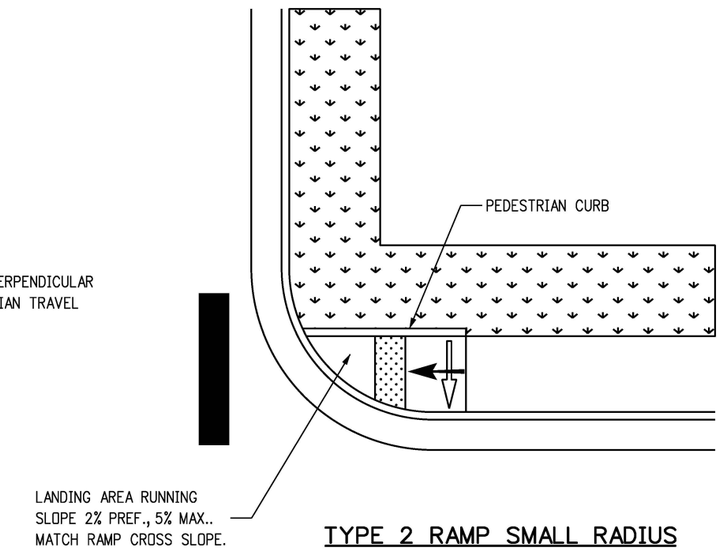

TYPE 2 RAMP SMALL RADIUS
(CROSSING IN ONE DIRECTION)

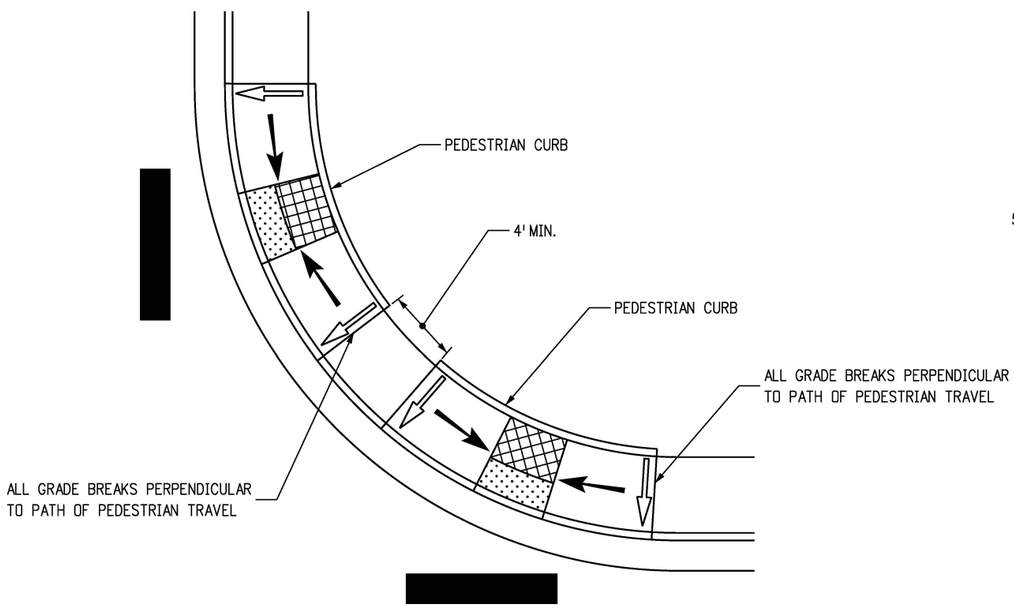

TYPE 2 RAMPS LARGE RADIUS

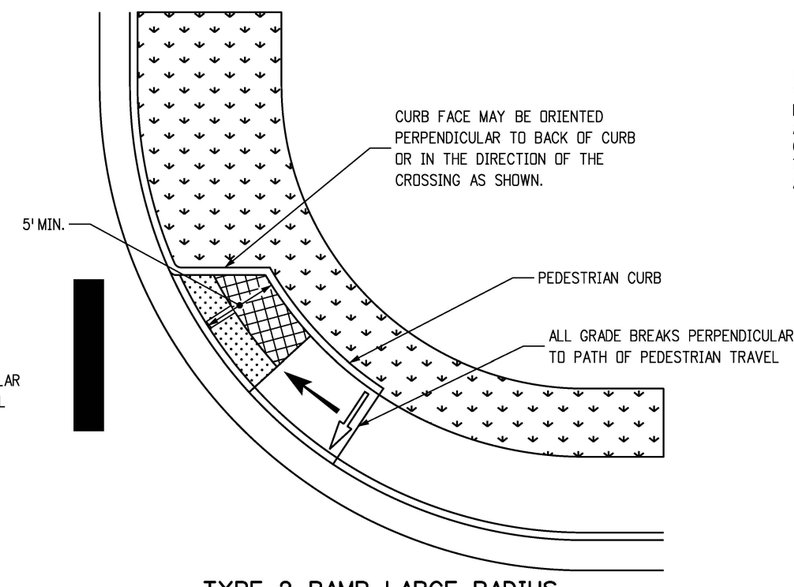

TYPE 2 RAMP LARGE RADIUS
(CROSSING IN ONE DIRECTION)

NOTE

PLACEMENTS SHOWN ARE TYPICAL CONFIGURATIONS ONLY AND NOT INDICATIVE OF ALL OPTIONS. OTHER RAMP CONFIGURATIONS MAY BE ACCEPTABLE AS LONG AS THEY CONFORM TO THE CRITERIA IN THESE STANDARDS, AND ARE APPROVED BY THE ENGINEER.

TURNING SPACE
(SEE NOTE 4, 5, 6 - SHEET 4)

DETECTABLE WARNING SURFACE (DWS)
SEE DWS SHEETS FOR PLACEMENT
DETAILS

RAMP RUNNING SLOPE

RAMP CROSS SLOPE

TYPE 2 CURB RAMPS TYPICAL CONFIGURATIONS

Computer File Information		Sheet Revisions	
		Date:	Comments
Creation Date: 07/31/19			
Designer Initials: JBK	(R-X)		
Last Modification Date: 07/31/19	(R-X)		
Detailer Initials: LTA	(R-X)		
CAD Ver.: MicroStation V8 Scale: Not to Scale Units: English	(R-X)		

Colorado Department of Transportation
2829 West Howard Place
CDOT HQ, 3rd Floor
Denver, CO 80204
Phone: 303-757-9021 FAX: 303-757-9868
Project Development Branch JBK

CURB RAMPS

Issued by the Project Development Branch: July 31, 2019

STANDARD PLAN NO.
M-608-1
Standard Sheet No. 5 of 10
Project Sheet Number:

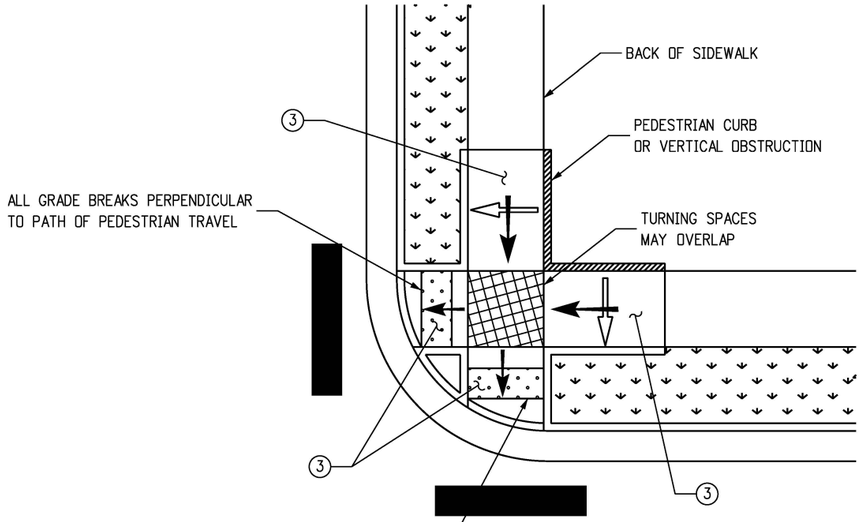

TYPE 1
COMBINATION RAMP

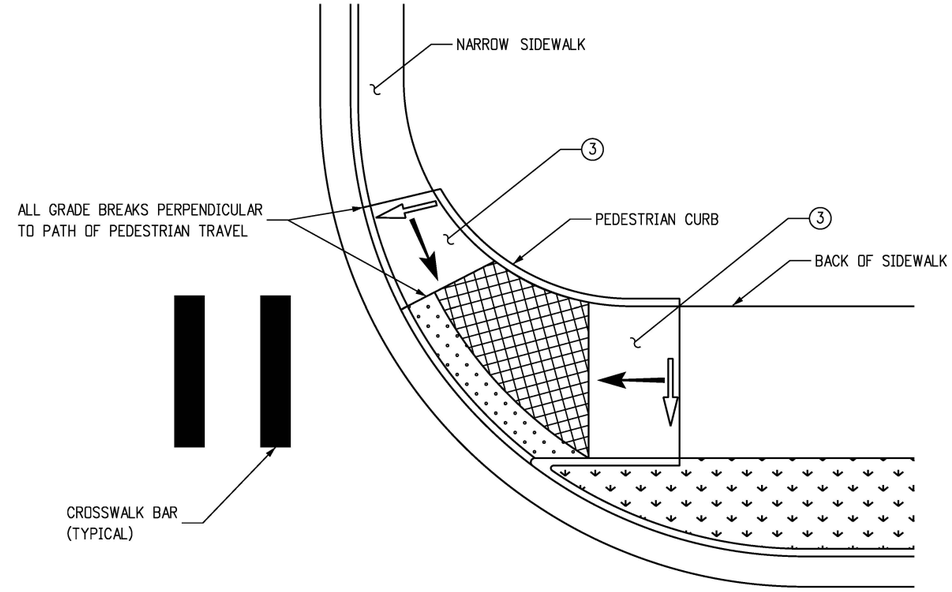

TYPE 1/TYPE 2
COMBINATION RAMP

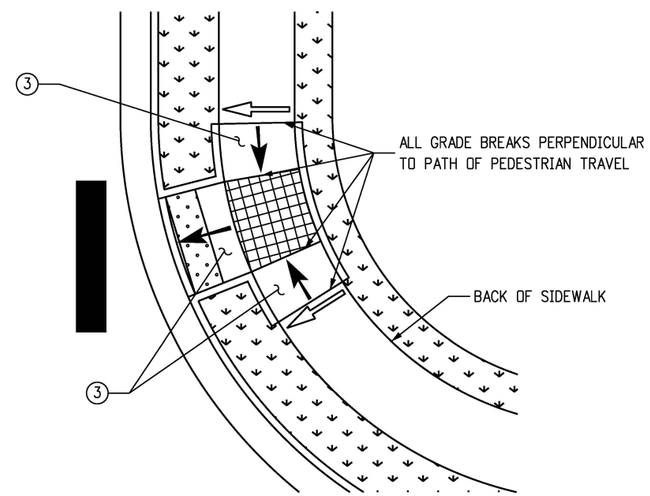

TYPE 1/TYPE 2
COMBINATION RAMP

COMBINATION CURB RAMP NOTES:

1. THE CURB RAMP PLACEMENTS SHOWN ARE TYPICAL CONFIGURATIONS ONLY AND NOT INDICATIVE OF ALL OPTIONS. OTHER CURB RAMP CONFIGURATIONS MAY BE ACCEPTABLE AS LONG AS THEY CONFORM TO THE CRITERIA IN THESE STANDARDS, AND ARE APPROVED BY THE ENGINEER.

2. RAMP AND TURNING SPACE CROSS SLOPE - 2.0% TYPICAL. AT CROSSINGS WITHOUT YIELD OR STOP CONTROL, OR WITH A SIGNAL WHERE VEHICLES CAN PROCEED THROUGH THE INTERSECTION WITHOUT SLOWING OR STOPPING, THE CROSS SLOPE OF THE RAMP AND TURNING SPACE MAY EQUALTHE HIGHWAY GRADE. AT MIDBLOCK PEDESTRIAN STREET CROSSINGS THE RAMP AND TURNING SPACE CROSS SLOPE MAY EQUAL THE HIGHWAY GRADE.

3. WHERE IT IS ACCEPTABLE FOR A RAMP OR TURNING SPACE CROSS SLOPE TO EXCEED 2.0% AND MATCH THE HIGHWAY GRADE, THE RAMP ABOVE THE TURNING SPACE MAY BE WARPED TO TIE INTO THE ADJOINING SIDEWALK CROSS SLOPE. THE TRANSITION TO THE SIDEWALK CROSS SLOPE SHALL BE SPREAD EVENLY OVER THE LENGTH OF THE RAMP TO MINIMIZE WARPING. THE RATE OF CHANGE IN CROSS SLOPE MAY NOT EXCEED 3.0% PER LINEAR FOOT.

TURNING SPACE 2 3

DETECTABLE WARNING SURFACE (DWS)
SEE DWS SHEETS FOR PLACEMENT DETAILS

RAMP RUNNING SLOPE

RAMP CROSS SLOPE 2 3

COMBINATION CURB RAMPS TYPICAL CONFIGURATIONS

Computer File Information		Sheet Revisions	
Creation Date: 07/31/19		Date:	Comments
Designer Initials: JBK	R-X		
Last Modification Date: 07/31/19	R-X		
Detailer Initials: LTA	R-X		
CAD Ver.: MicroStation V8 Scale: Not to Scale Units: English	R-X		

Colorado Department of Transportation
2829 West Howard Place
CDOT HQ, 3rd Floor
Denver, CO 80204
Phone: 303-757-9021 FAX: 303-757-9868
Project Development Branch JBK

CURB RAMPS

Issued by the Project Development Branch: July 31, 2019

STANDARD PLAN NO.
M-608-1
Standard Sheet No. 6 of 10
Project Sheet Number:

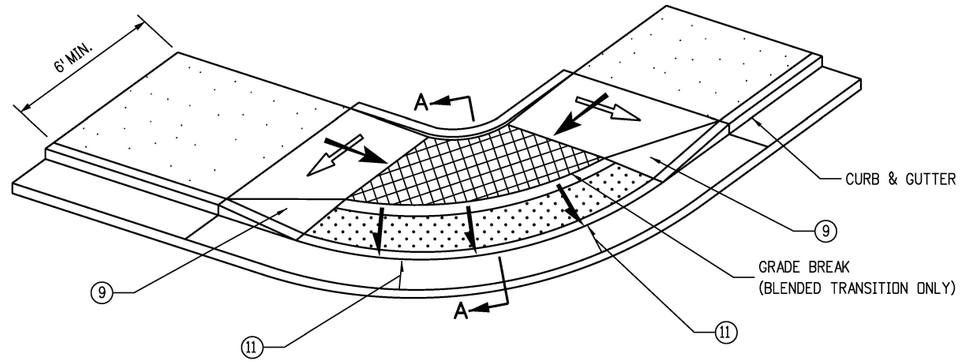

BLENDED TRANSITION

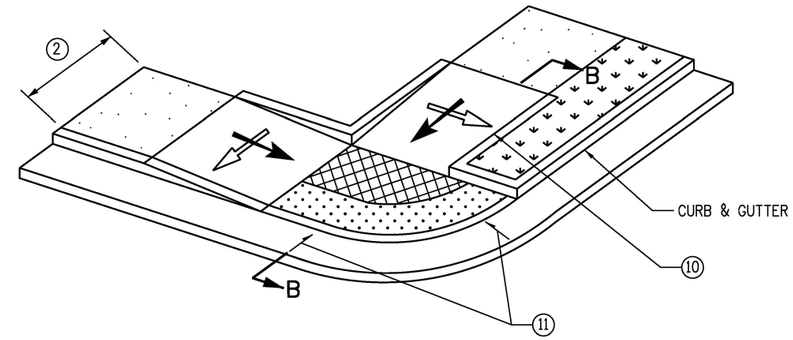

DEPRESSED CORNER

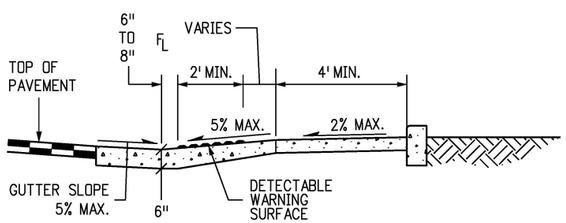

SECTION A-A

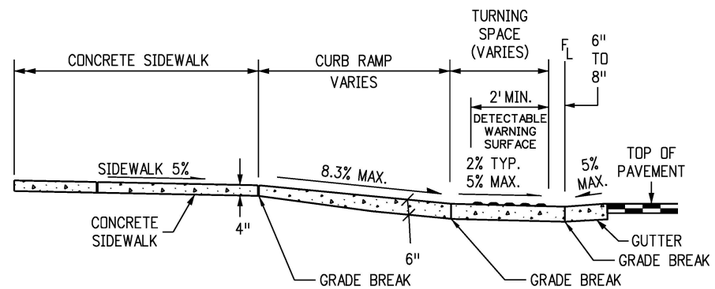

SECTION B-B

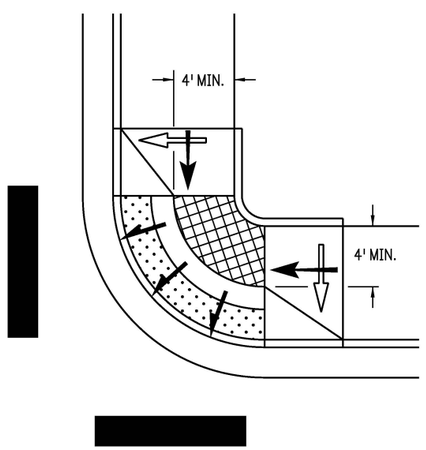

BLENDED TRANSITION

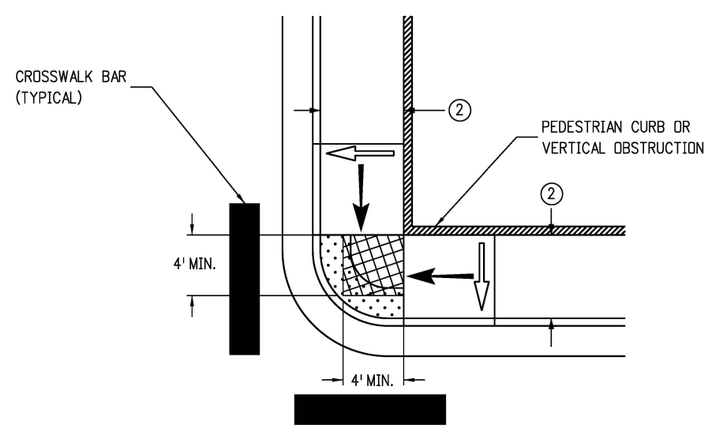

DEPRESSED CORNER

SIDEWALK

TURNING SPACE 4 5 6

DETECTABLE WARNING SURFACE (DWS)

BLENDED TRANSITION & DEPRESSED CORNER NOTES

1. PERPENDICULAR AND PARALLEL RAMP CONFIGURATIONS ARE PREFFERED. BLENDED TRANSITIONS AND DEPRESSED CORNERS SHOULD ONLY BE USED WHERE SITE CONDITIONS MAKE THEM A MORE APPROPRIATE OPTION, OR WHERE PERPENDICULAR OR PARALLEL RAMPS CANNOT BE INSTALLED DUE TO A PHYSICAL SITE CONSTRAINT.
2. RAMP WIDTH - PROVIDE 5 FT. OR GREATER WHERE POSSIBLE. IF SITE CONSTRAINTS DO NOT PERMIT, PROVIDE 4FT. WIDTH MINIMUM. RAMPS SERVICING SHARED USE PATHS SHALL MATCH THE WIDTH OF THE PATH.
3. RAMP RUNNING SLOPE - 8.3% MAX.
4. BLENDED TRANSITION RUNNING SLOPE - 5.0% MAX.
5. RAMP AND TURNING SPACE CROSS SLOPE - 2.0% TYPICAL. AT CROSSINGS WITHOUT YIELD OR STOP CONTROL, OR WITH A SIGNAL WHERE VEHICLES CAN PROCEED THROUGH THE INTERSECTION WITHOUT SLOWING OR STOPPING, THE CROSS SLOPE OF RAMPS AND TURNING SPACES MAY EQUAL THE HIGHWAY GRADE.
6. TURNING SPACE DIMENSIONS - PROVIDE A 4 FT. X 4 FT. MIN. TURNING SPACE AT THE BOTTOM OF RAMP RUNS. THE TURNING SPACE MAY CONTAIN THE DETECTABLE WARNING SURFACES.
7. RAMP ALIGNMENT - TURNING SPACE SHALL BE ALIGNED TO BE FULLY CONTAINED WITHIN THE CROSSWALK OR STREET CROSSING(S) THEY SERVE.
8. RAMP LENGTH - RAMP LENGTH IS DEPENDENT UPON THE RAMP SLOPE AND THE CHANGE OF ELEVATION FROM THE TURNING SPACE TO THE SIDEWALK. WHERE TERRAIN IS SLOPING A RAMP IS NOT REQUIRED TO CHASE GRADE MORE THAN 15 FT. REGARDLESS OF THE RESULTING RAMP SLOPE.
9. RAMP FLARES - WHERE A RAMP EDGE ABUTS A WALKABLE SURFACE, A FLARED SIDE MUST BE PROVIDED. RAMP FLARE SLOPES SHALL NOT EXCEED 10.0%.
10. VERTICAL CURB RETURNS - VERTICAL CURB RETURNS MAY BE USED ONLY WHERE A RAMP ABUTS A NON-WALKABLE SURFACE, OR WHERE A RAMP IS PROTECTED FROM PEDESTRIAN CROSS TRAFFIC (FOR EXAMPLE BY A SIGNAL CABINET OR UTILITY POLE WHICH BLOCKS PASSAGE).
11. GUTTER COUNTER SLOPE - 5.0% MAX.
12. DWS PLACEMENT - DWS SHALL BE PLACED AROUND THE RADIUS AND LOCATED AT THE BACK OF CURB ON BLENDED TRANSITION AND DEPRESSED CORNER RAMPS.

TYPE 5 - DEPRESSED CORNER/BLENDED TRANSITION

Computer File Information		Sheet Revisions	
Creation Date: 07/31/19		Date:	Comments
Designer Initials: JBK	R-X		
Last Modification Date: 07/31/19	R-X		
Detailer Initials: LTA	R-X		
CAD Ver.: MicroStation V8 Scale: Not to Scale Units: English	R-X		

Colorado Department of Transportation
2829 West Howard Place
CDOT HQ, 3rd Floor
Denver, CO 80204
Phone: 303-757-9021 FAX: 303-757-9868
Project Development Branch JBK

CURB RAMPS

Issued by the Project Development Branch: July 31, 2019

STANDARD PLAN NO.
M-608-1
Standard Sheet No. 7 of 10
Project Sheet Number:

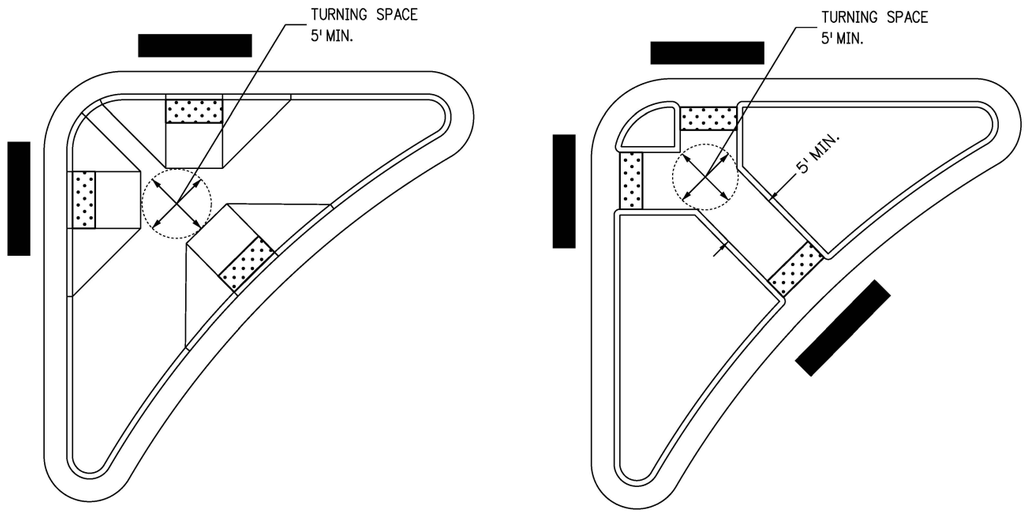

INTERSECTION ISLANDS

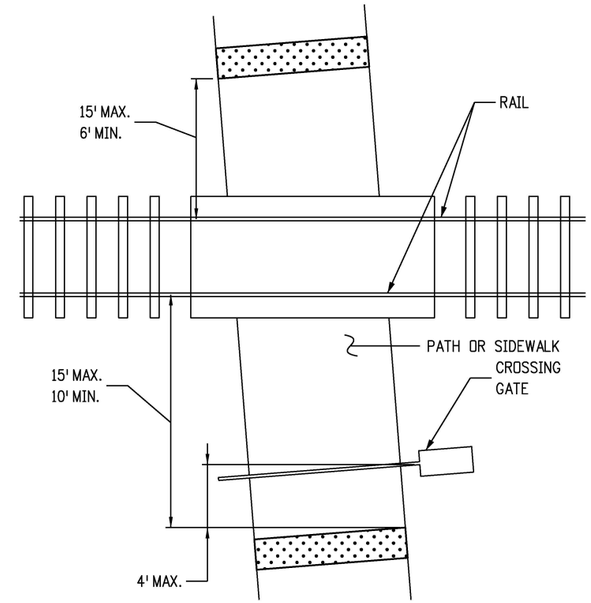

AT-GRADE RAIL CROSSING

NOTES:

1. DETECTABLE WARNING SURFACES SHALL BE PLACED IN ALIGNMENT WITH THE BACK OF CURB.
2. FLARED SIDES ARE PREFERENTIAL ON RAISED INTERSECTION ISLANDS AND SHOULD BE PROVIDED ON ISLANDS WHICH SERVE SHARED USE PATHS, OR AT LOCATIONS WHERE BICYCLE USE IS EXPECTED.
3. FOR CUT-THROUGH MEDIAN ISLANDS, DETECTABLE WARNING SURFACES SHALL BE PLACED IN ALIGNMENT WITH THE BACK OF CURB AND BE SEPARATED BY A MINIMUM 2 FOOT SPACE WITHOUT DWS. IF A 2 FOOT SEPARATION BETWEEN DETECTABLE WARNING SURFACES CANNOT BE PROVIDED NO DETECTABLE WARNING SURFACE SHALL BE INSTALLED.
4. CURB RAMP AND CUT-THROUGH WIDTHS SHOULD BE THE SAME WIDTH AS ANY SIDEWALK OR SHARED USE PATH WHICH THEY SERVE.

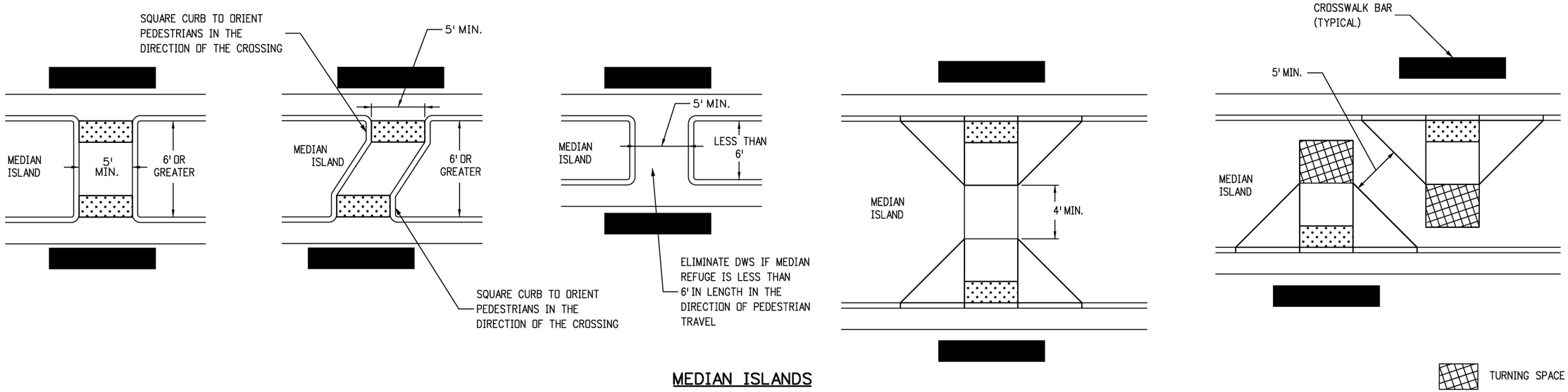

MEDIAN ISLANDS

MEDIANS / RAILROADS / ISLANDS

Computer File Information		Sheet Revisions	
Creation Date: 07/31/19		Date:	Comments
Designer Initials: JBK	(R-X)		
Last Modification Date: 07/31/19	(R-X)		
Detailer Initials: LTA	(R-X)		
CAD Ver.: MicroStation V8 Scale: Not to Scale Units: English	(R-X)		

Colorado Department of Transportation
2829 West Howard Place
CDOT HQ, 3rd Floor
Denver, CO 80204
Phone: 303-757-9021 FAX: 303-757-9868
Project Development Branch JBK

CURB RAMPS

Issued by the Project Development Branch: July 31, 2019

STANDARD PLAN NO.
M-608-1
Standard Sheet No. 8 of 10
Project Sheet Number:

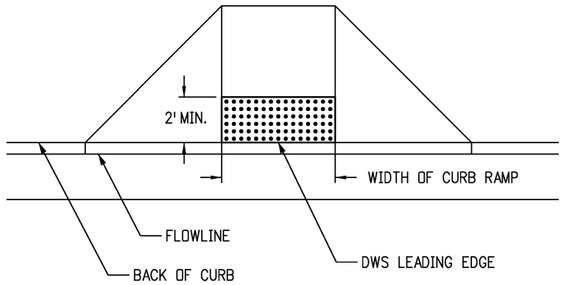

TYPE 1 CURB RAMP
(PERPENDICULAR ON TANGENT)

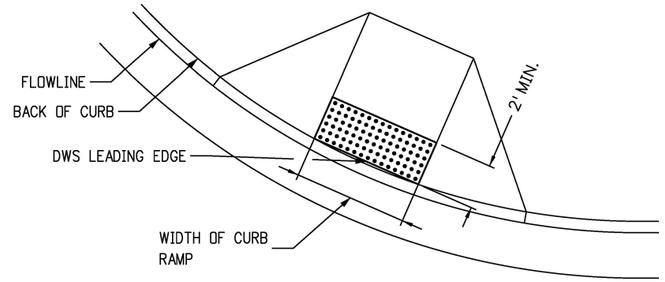

TYPE 1 CURB RAMP
(PERPENDICULAR ON RADIUS)

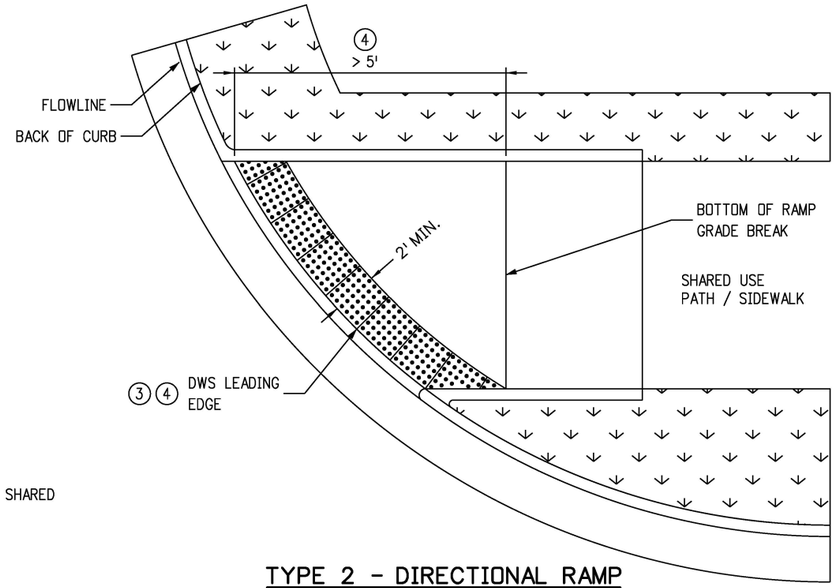

TYPE 2 - DIRECTIONAL RAMP

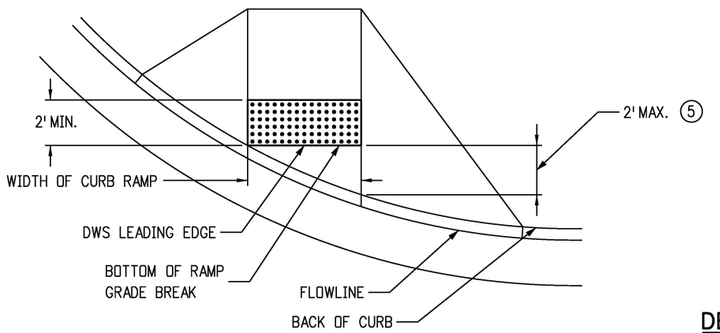

TYPE 1 CURB RAMP
(DIRECTIONAL ON RADIUS)

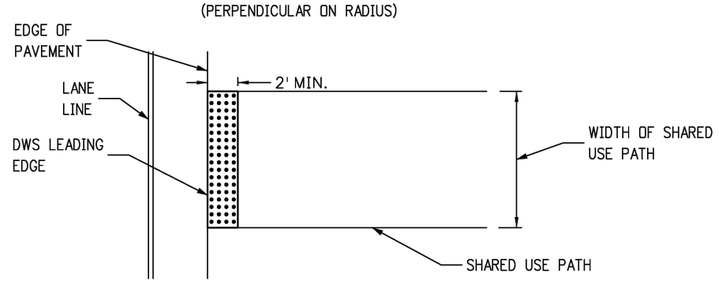

SHARED USE PATH CROSSING

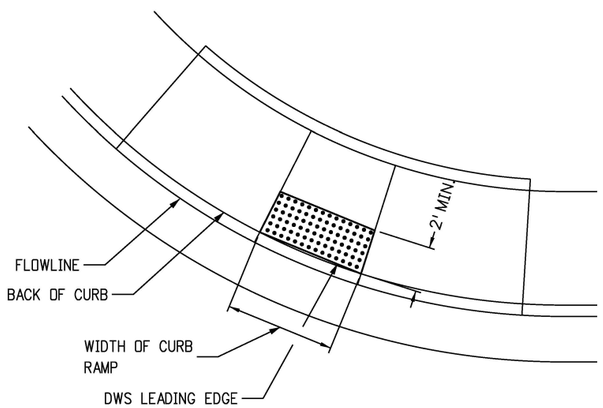

TYPE 2 CURB RAMP

DETECTABLE WARNING SURFACE NOTES:

1. DETECTABLE WARNING SURFACES (DWS) SHALL BE INSTALLED AT SIDEWALK, OR SHARED USE PATH, TO STREET TRANSITIONS, AND SHALL CONSIST OF TRUNCATED DOME SURFACES. ANY TRUNCATED DOME PANELS OR PAVERS WHICH ARE USED MUST BE ON THE CDOT APPROVED PRODUCTS LIST (APL).
2. THE DETECTABLE WARNING SURFACE SHALL SPAN THE FULL WIDTH OF THE CURB RAMP, SHARED USE PATH, OR OTHER ROADWAY ENTRANCE AS APPLICABLE. A GAP OF 2 INCHES FROM THE EDGE OF THE DETECTABLE WARNING SURFACE TO THE EDGE OF THE CURB RAMP OR SHARED USE PATH IS PERMITTED.
3. WHEN DETECTABLE WARNING SURFACES ARE PLACED ON A SLOPE GREATER THAN 5.0%, TRUNCATED DOMES SHOULD BE ALIGNED IN THE DIRECTION OF THE RAMP RUN; OTHERWISE DOMES ARE NOT REQUIRED TO BE ALIGNED. TRUNCATED DOMES SHALL BE IN A SQUARE GRID OR RADIAL PATTERN. WHEN PLACED RADIALLY, PLACE ADJACENT DWS PLATES EDGE TO EDGE. EDGES OF CUT PLATES SHALL BE STRAIGHT.
4. LOCATE ONE CORNER OF THE DWS LEADING EDGE AT THE BACK OF CURB. NO POINT ON THE LEADING EDGE OF THE DWS MAY BE MORE THAN 5 FT. FROM THE BACK OF CURB. WHEN ANY POINT OF THE LEADING EDGE OF THE DWS WILL BE GREATER THAN 5 FT. FROM THE BACK OF CURB, PLACE THE DWS RADIALLY AT THE BACK OF CURB.
5. WHERE PERPENDICULAR DIRECTIONAL RAMPS ABUT A WALKABLE SURFACE, THE LEADING EDGE OF THE DWS SHALL NOT BE PLACED FURTHER THAN 2 FEET FROM THE BACK OF CURB. IF THE RADIUS OF A CORNER MAKES THIS IMPOSSIBLE, ORIENT THE CURB RAMP PERPENDICULAR TO THE CURB AND GUTTER.
6. IF THE DETECTABLE WARNING SURFACE IS CUT, GRIND OFF THE REMAINING PORTION OF ANY CUT TRUNCATED DOMES. SEAL ALL CUT PANEL EDGES WITH AN APL SEALANT TO PREVENT WATER DAMAGE.
7. TRUNCATED DOME PLATES SHALL BE EMBEDED IN THE CONCRETE CURB RAMP WHILE THE CONCRETE IS PLASTIC.
8. DWS SHALL NOT BE PLACED OVER GRADE BREAKS.

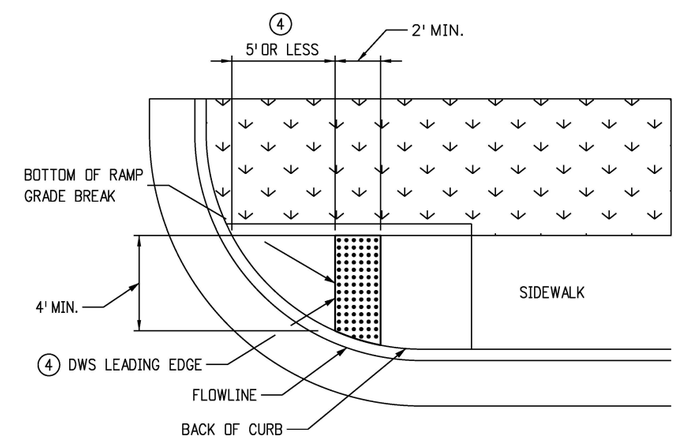

TYPE 2 - DIRECTIONAL RAMP

DETECTABLE WARNING SURFACE (DWS)

DETECTABLE WARNING SURFACE PLACEMENT

Computer File Information		Sheet Revisions	
Creation Date: 07/31/19		Date:	Comments
Designer Initials: JBK	R-X		
Last Modification Date: 07/31/19	R-X		
Detailer Initials: LTA	R-X		
CAD Ver.: MicroStation V8 Scale: Not to Scale Units: English	R-X		

Colorado Department of Transportation
2829 West Howard Place
CDOT HQ, 3rd Floor
Denver, CO 80204
Phone: 303-757-9021 FAX: 303-757-9868
Project Development Branch JBK

CURB RAMPS

Issued by the Project Development Branch: July 31, 2019

STANDARD PLAN NO.
M-608-1
Standard Sheet No. 9 of 10
Project Sheet Number:

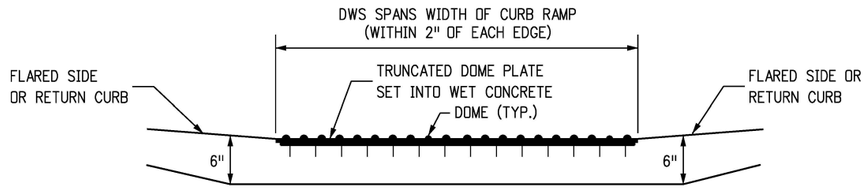

SECTION VIEW OF DETECTABLE WARNING SURFACE PLATE

(LOOKING AT PERPENDICULAR RAMP RUN FROM STREET)

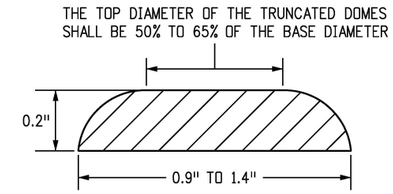

ELEVATION VIEW OF SINGLE TRUNCATED DOME

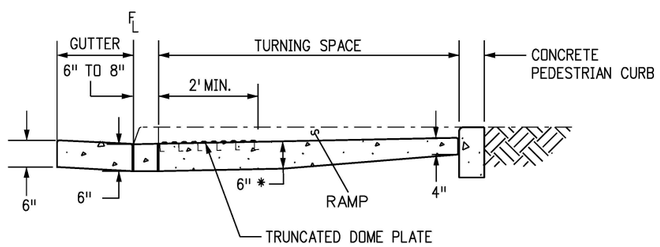

SECTION VIEW FOR PARALLEL CURB RAMP TYPES

(LOOKING PERPENDICULAR TO TURNING SPACE)

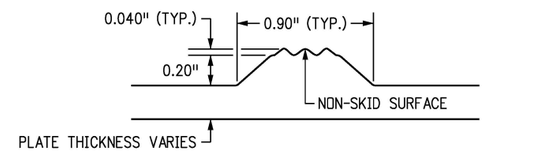

ELEVATION VIEW OF TRUNCATED DOME FOR DETECTABLE WARNING PLATE

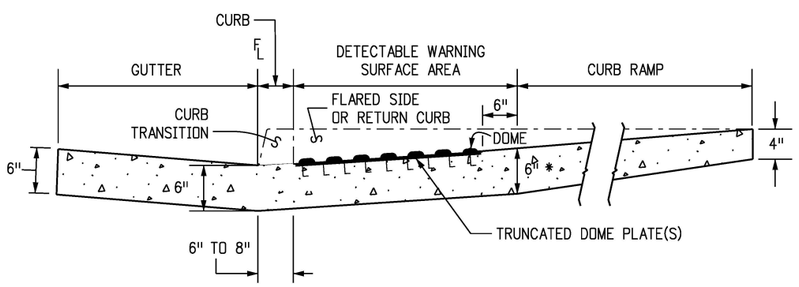

SECTION VIEW FOR PERPENDICULAR CURB RAMP TYPES

(LOOKING PERPENDICULAR TO RAMP RUN)

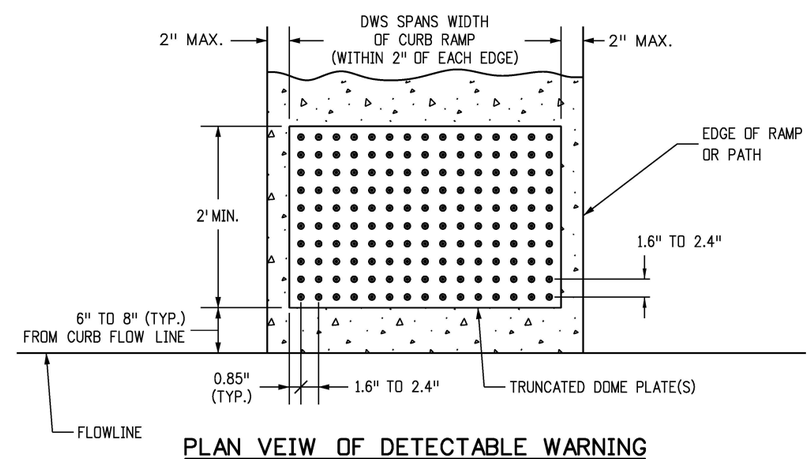

PLAN VEIW OF DETECTABLE WARNING SURFACE PLATE

DETECTABLE WARNING SURFACE DETAILS

Computer File Information		Sheet Revisions	
Creation Date: 07/31/19		Date:	Comments
Designer Initials: JBK	(R-X)		
Last Modification Date: 07/31/19	(R-X)		
Detailer Initials: LTA	(R-X)		
CAD Ver.: MicroStation V8 Scale: Not to Scale Units: English	(R-X)		

Colorado Department of Transportation
2829 West Howard Place
CDOT HQ, 3rd Floor
Denver, CO 80204
Phone: 303-757-9021 FAX: 303-757-9868
Project Development Branch JBK

CURB RAMPS

Issued by the Project Development Branch: July 31, 2019

STANDARD PLAN NO.
M-608-1
Standard Sheet No. 10 of 10
Project Sheet Number: