United States Patent [19]

Antkowiak

[11] **Patent Number: 4,513,378**

[45] **Date of Patent: Apr. 23, 1985**

[54] **HIGH-ACCURACY NAVIGATING APPARATUS WITH STEP-DRIVEN PROJECTED CHART**

[76] Inventor: **Edward T. Antkowiak,** Harbour Hill, York, Me. 03909

[21] Appl. No.: **313,233**

[22] Filed: **Oct. 20, 1981**

[51] **Int. Cl.**[3] **G01S 7/10;** G01S 7/46; G06F 15/50

[52] **U.S. Cl.** **364/450;** 343/389; 353/13; 364/452; 364/460

[58] **Field of Search** 364/443, 444, 446, 447, 364/449, 450, 452, 460; 343/452, 389

[56] **References Cited**

U.S. PATENT DOCUMENTS

3,242,605	3/1966	Kleinschmidt	353/120 X
3,333,357	8/1967	Grogan	353/120 X
3,347,134	10/1967	Nervin	353/120
3,359,408	12/1967	Briggs	364/460
3,450,472	6/1969	Warden	353/11
3,474,556	10/1969	Scovill	343/452 X
3,486,815	12/1969	Roscoe	364/447 X
3,486,816	12/1969	Streeter	364/460 X
3,501,765	3/1970	Roscoe	343/409 X
3,538,313	11/1970	Thomas et al.	364/460
3,617,134	11/1971	Frush et al.	353/120 X
3,652,836	3/1972	Richardson et al.	364/447
3,821,523	6/1974	Chisholm et al.	364/460
4,013,353	3/1977	Portner et al.	353/121 X
4,086,632	4/1978	Lions	364/444
4,105,319	8/1978	Wells et al.	353/120
4,114,997	9/1978	Lunetta	353/11
4,253,150	2/1981	Scovill	364/449
4,283,763	8/1981	Bylinsky et al.	364/449

FOREIGN PATENT DOCUMENTS

2361677	3/1978	France	353/120
1464380	2/1977	United Kingdom	353/120

Primary Examiner—Felix D. Gruber

Attorney, Agent, or Firm—Cushman, Darby & Cushman

[57] **ABSTRACT**

A small fraction of the area shown in an ultraminiature color transparency of a standard navigating chart is projected onto a viewing screen, and the transparency is moved by a precision step-driven transport mechanism to hold the present position of the ship (or other craft) at crosshairs on the screen. The transport mechanism is controlled by a digital electronic computer that receives data from a human operator, from speed and direction sensors carried in the craft, and/or from radio navigational-aid (such as Loran) signals. The computer includes separate dedicated microprocessors for managing the transport mechanism and the receipt of sensor or radio signals, and a master general-purpose processor for performing calculations and coordinating the system functions with operator instructions.

The computer calculates position, "course to steer," and other parameters based on dead reckoning, manually entered bearings of navigational objects, and/or the data automatically received from such radio aids; and it controls the transparency transport on the basis of calculated position. By comparing dead-reckoning results with actual position fixes the computer determines set and drift, and it reads out "course to steer" that is corrected for set and drift. The computer can also control an autopilot, automatically setting a heading that produces the desired track, practically independent of currents.

11 Claims, 121 Drawing Figures

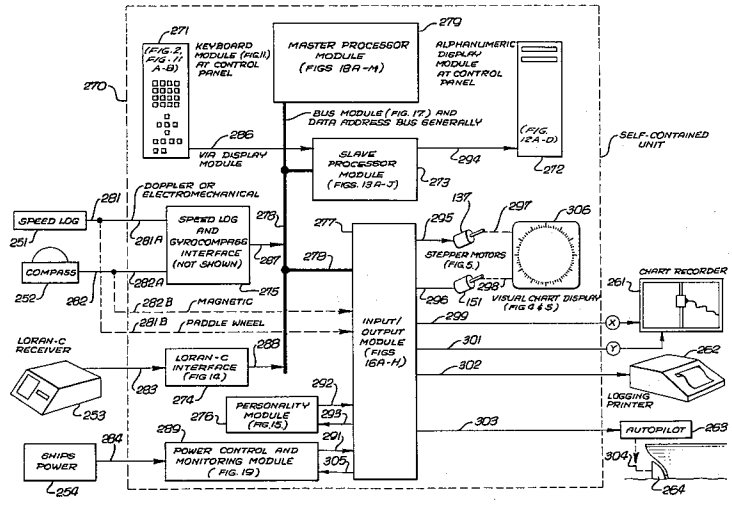

Fig. 1.

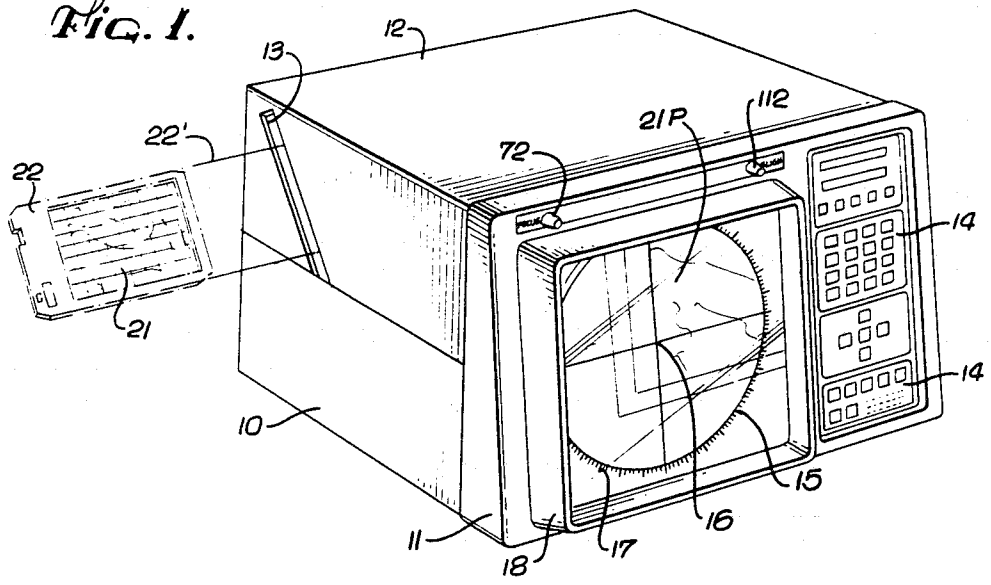
12
13
22'
22
72
21P
112
14
21
14
10
15
16
11
17
18

Fig. 2.

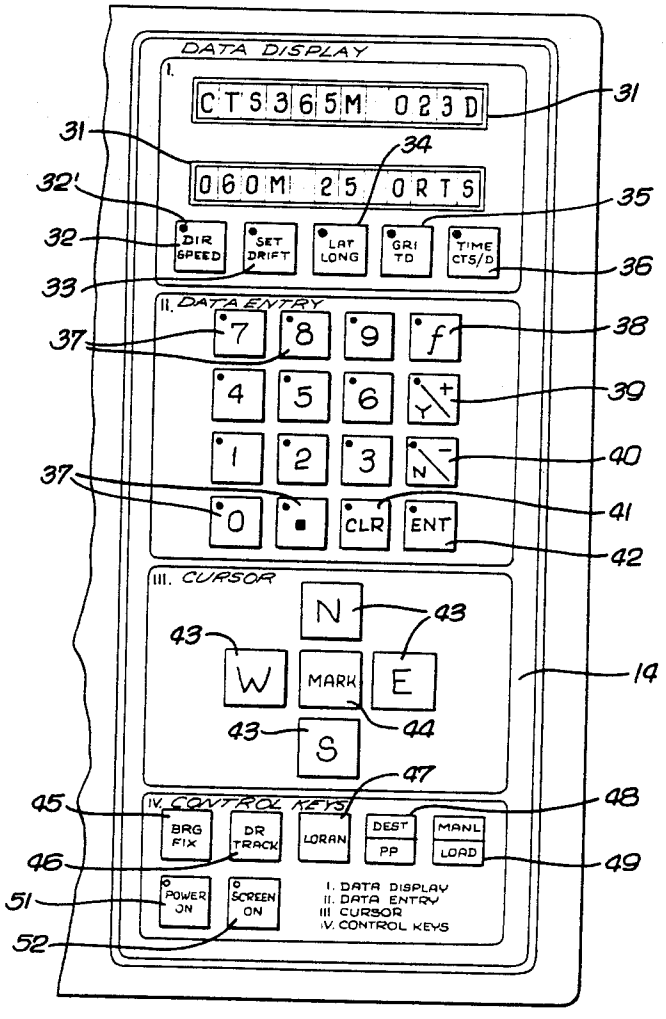
DATA DISPLAY
I.
CTS365M 023D
060M 25 ORTS
DIR SPEED
SET DRIFT
LAT LONG
GRI TD
TIME CTS/D
II. DATA ENTRY
7
8
9
f
4
5
6
Y
1
2
3
N
0
CLR
ENT
III. CURSOR
N
W
MARK
E
S
IV. CONTROL KEYS
BRG FIX
DR TRACK
LORAN
DEST PP
MANL LOAD
POWER ON
SCREEN ON
I. DATA DISPLAY
II. DATA ENTRY
III CURSOR
IV. CONTROL KEYS
31
31
34
32'
35
32
33
36
37
38
39
40
37
41
42
43
43
43
44
14
47
45
48
46
49
51
52

FIG. 3.

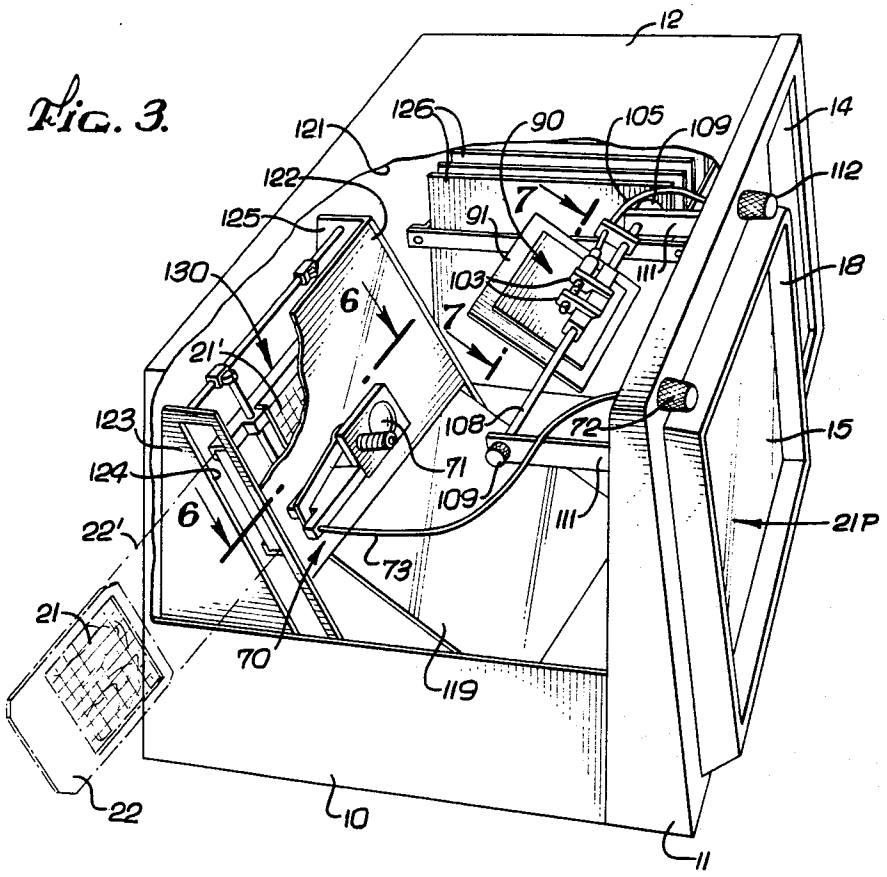
12
14
112
18
15
21P
126
90
105
109
121
122
125
130
91
103
111'
7
6
21'
123
124
22'
108
72
71
109
111
73
21
70
119
22
10
11

FIG. 4.

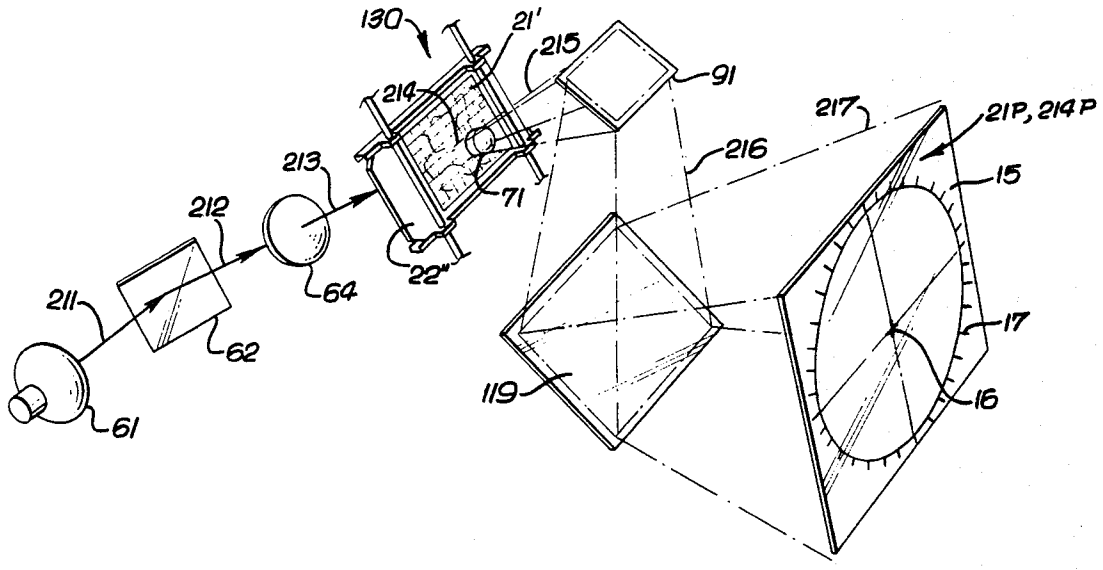
130
21'
215
91
214
217
21P, 214P
216
213
15
212
71
22"
64
211
62
17
119
16
61

FIG. 5.

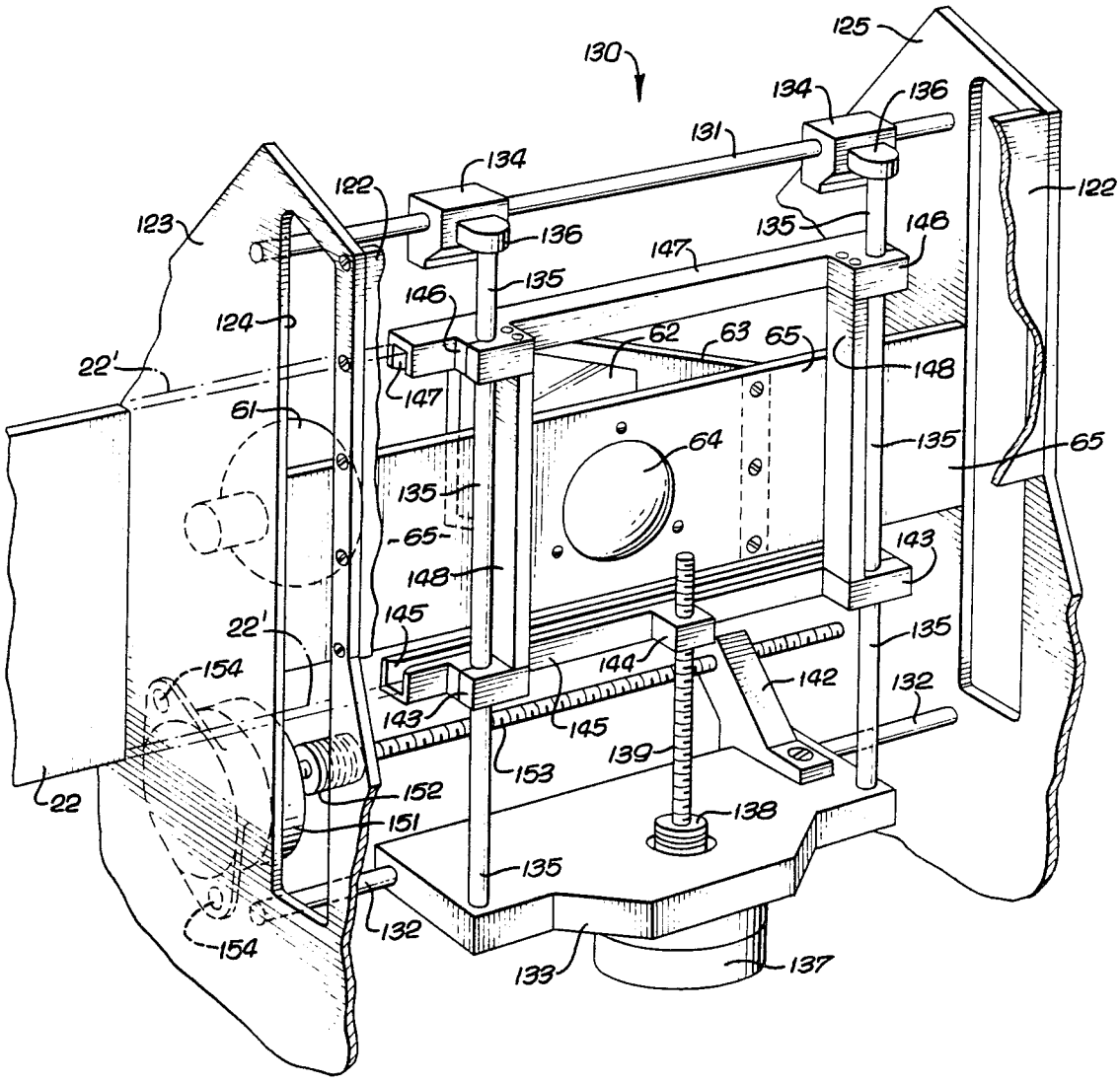
130
125
134
136
131
134
122
122
123
136
135
146
147
135
146
124
62
63
65
22'
148
147
61
64
135
65
135
65
143
148
145
22'
135
154
144
142
132
143
145
139
153
152
22
151
138
135
132
154
133
137

FIG. 6.

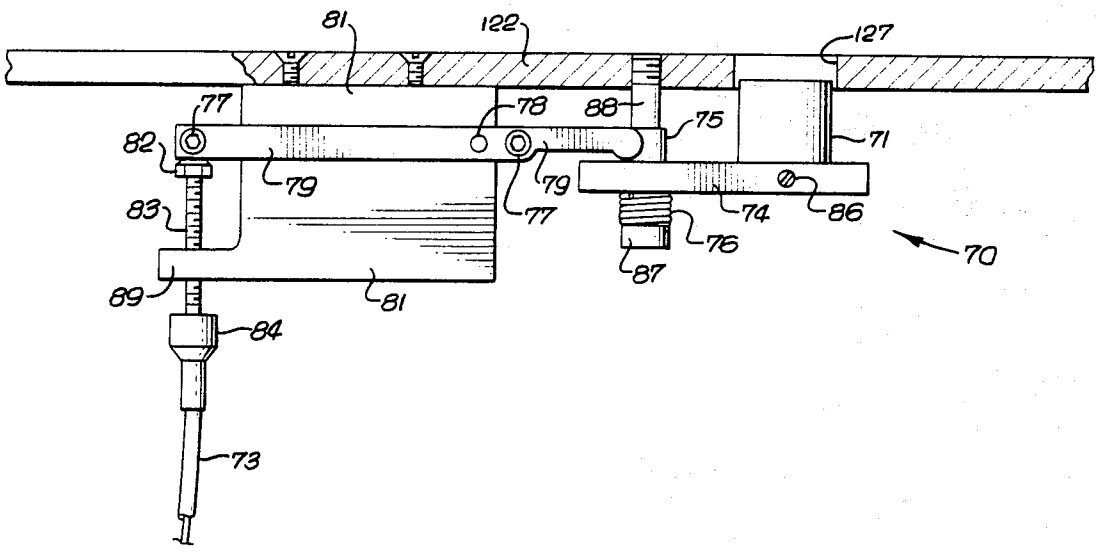
81
122
127
77
78
88
75
71
82
79
79
77
74
86
83
76
70
87
89
81
84
73

FIG. 7.

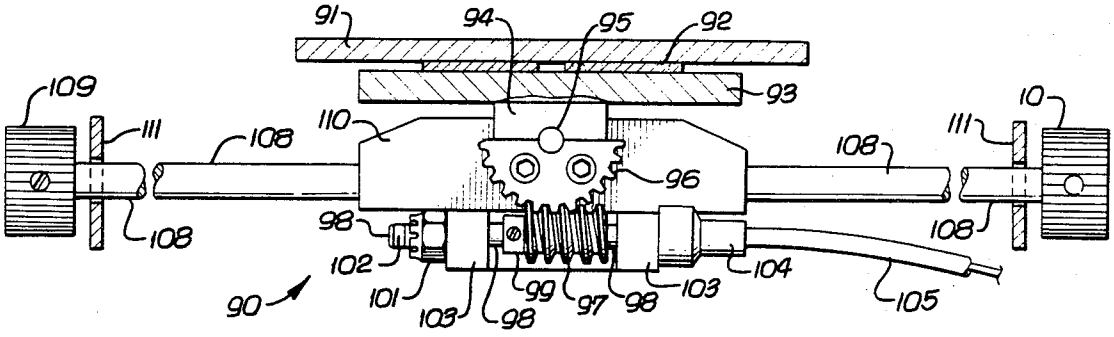
91
94
95
92
93
109
111
108
110
108
111
10
96
108
98
108
102
101
103
98
99
97
98
103
104
105
90

FIG. 8.

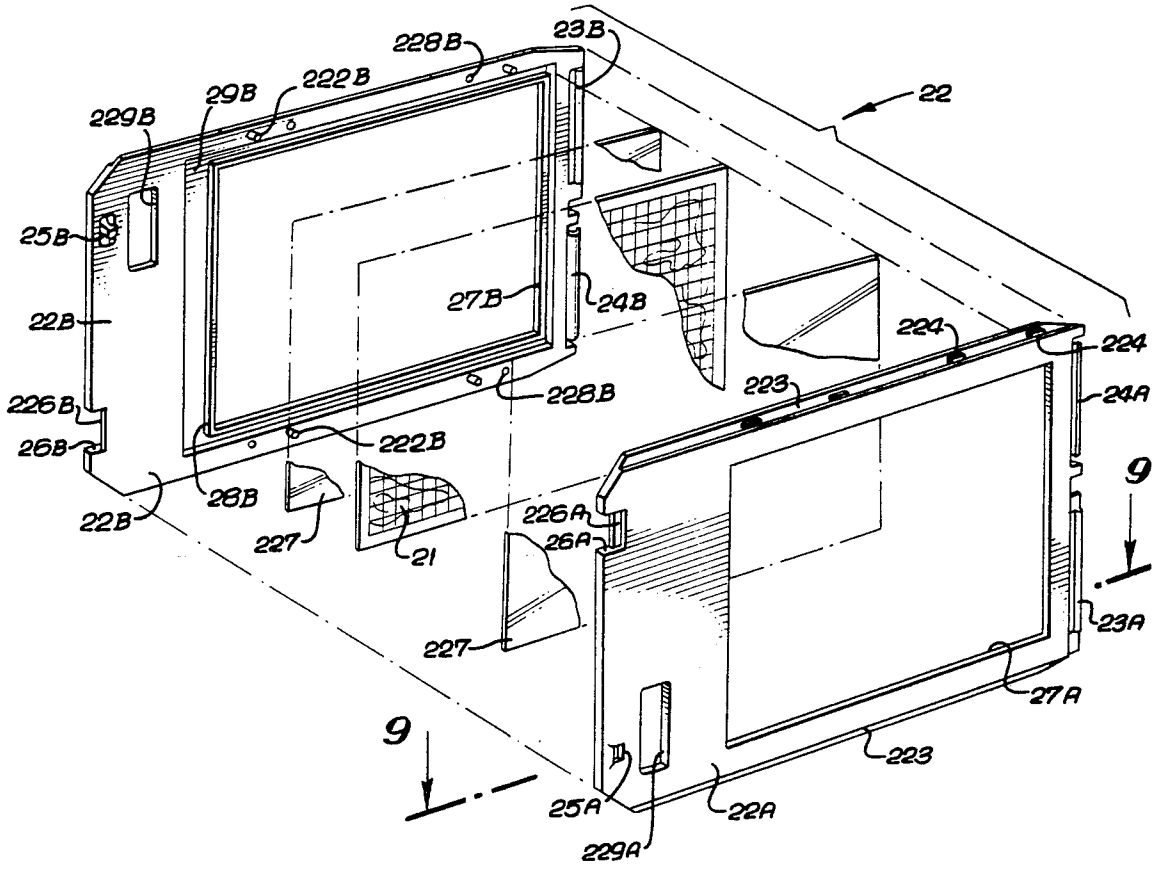
228B
23B
22
29B
222B
229B
25B
22B
27B
24B
224
224
226B
228B
223
24A
26B
222B
9
28B
22B
227
21
226A
26A
23A
227
27A
9
223
25A
22A
229A

FIG. 9.

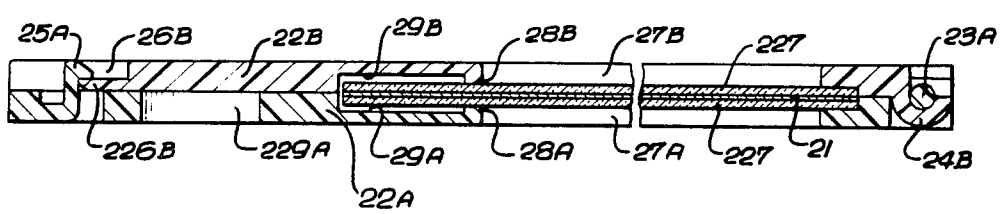
25A
26B
22B
29B
28B
27B
227
23A
226B
229A
29A
28A
27A
227
21
24B
22A

Fig. 10.

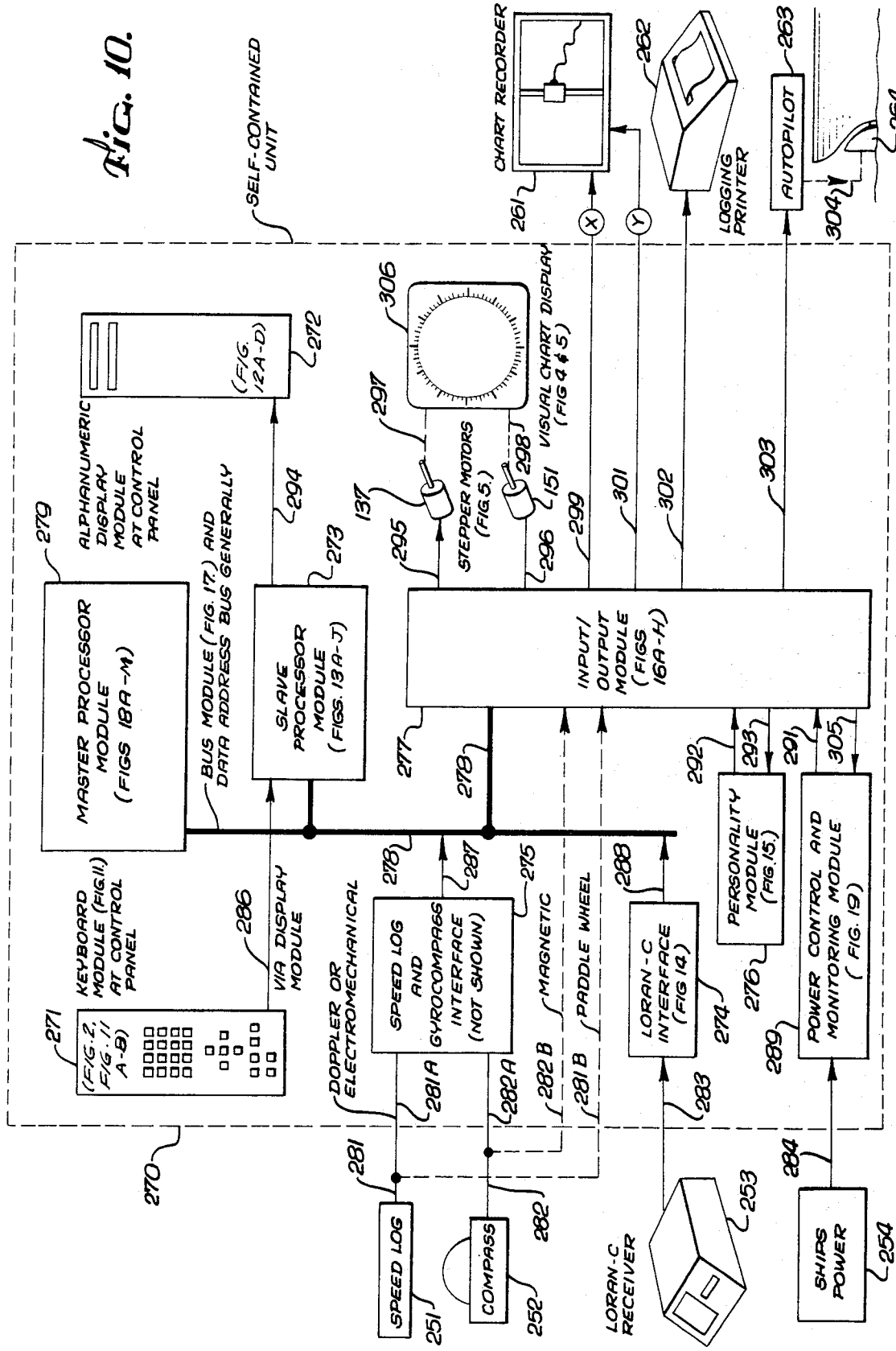
SELF-CONTAINED UNIT
CHART RECORDER
261
262
LOGGING PRINTER
AUTOPILOT
263
264
304
306
297
298
VISUAL CHART DISPLAY (FIG 4 & 5)
STEPPER MOTORS (FIG. 5.)
137
151
295
296
299
301
302
303
ALPHANUMERIC DISPLAY MODULE AT CONTROL PANEL
(FIG. 12A-D)
272
294
279
MASTER PROCESSOR MODULE (FIGS 18A-M)
BUS MODULE (FIG. 17.) AND DATA ADDRESS BUS GENERALLY
SLAVE PROCESSOR MODULE (FIGS. 13A-J)
273
INPUT/ OUTPUT MODULE (FIGS 16A-H)
277
278
KEYBOARD MODULE (FIG.11) AT CONTROL PANEL
271
(FIG. 2; FIG. 11 A-B)
286
VIA DISPLAY MODULE
DOPPLER OR ELECTROMECHANICAL
SPEED LOG AND GYROCOMPASS INTERFACE (NOT SHOWN)
278
287
275
MAGNETIC
PADDLE WHEEL
281 A
282 A
282 B
281 B
288
LORAN-C INTERFACE (FIG 14)
PERSONALITY MODULE (FIG. 15.)
292
293
291
305
274
276
289
POWER CONTROL AND MONITORING MODULE (FIG. 19)
270
281
283
284
SPEED LOG
251
COMPASS
252
282
LORAN-C RECEIVER
253
SHIPS POWER
254

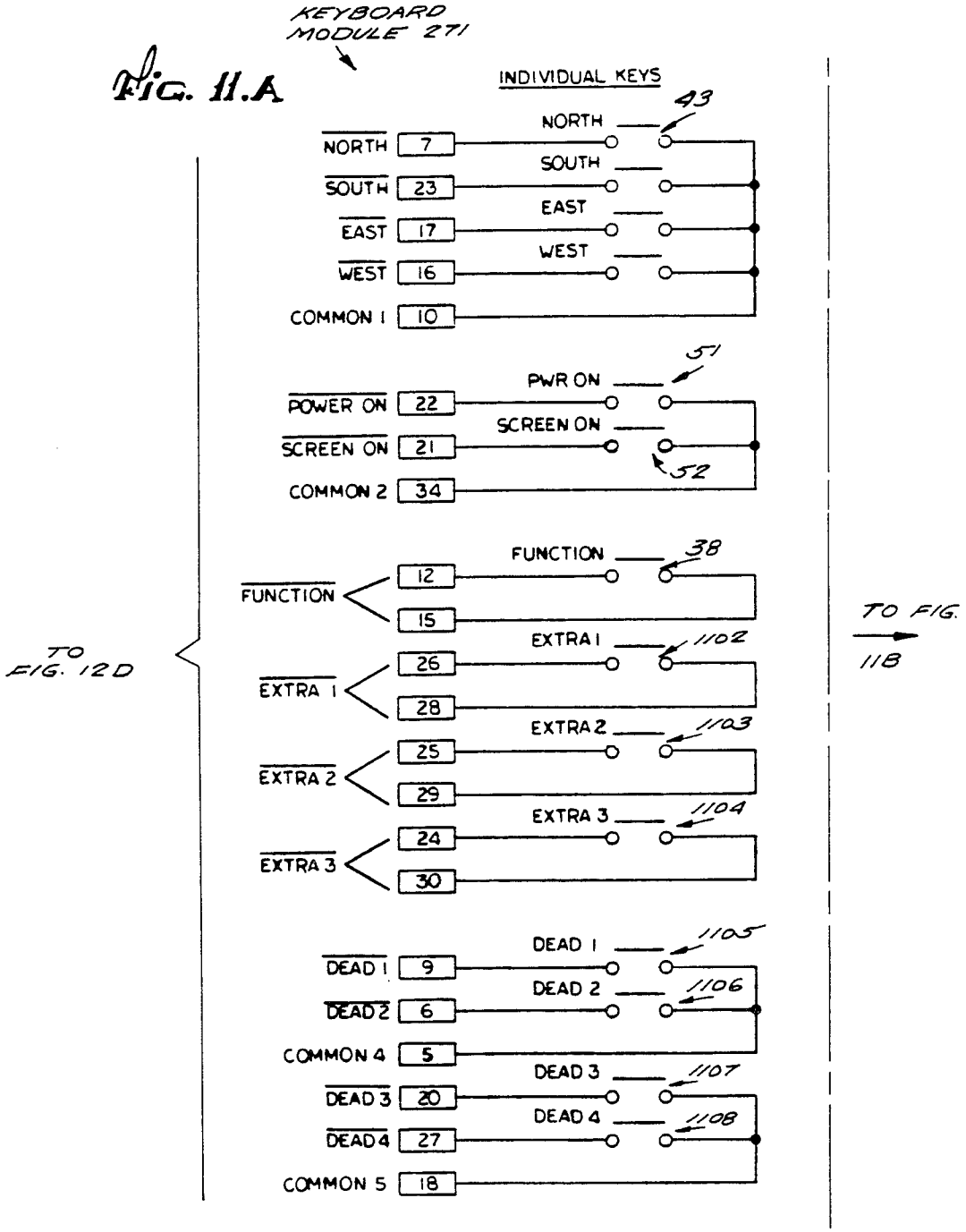
KEYBOARD MODULE 271
INDIVIDUAL KEYS
NORTH
SOUTH
EAST
WEST
COMMON 1
POWER ON
SCREEN ON
COMMON 2
FUNCTION
EXTRA 1
EXTRA 2
EXTRA 3
DEAD 1
DEAD 2
COMMON 4
DEAD 3
DEAD 4
COMMON 5
43
51
52
38
1102
1103
1104
1105
1106
1107
1108
7
23
17
16
10
22
21
34
12
15
26
28
25
29
24
30
9
6
5
20
27
18
TO FIG. 12D
TO FIG. 118

Fig. 11.A

FIG. 11.B

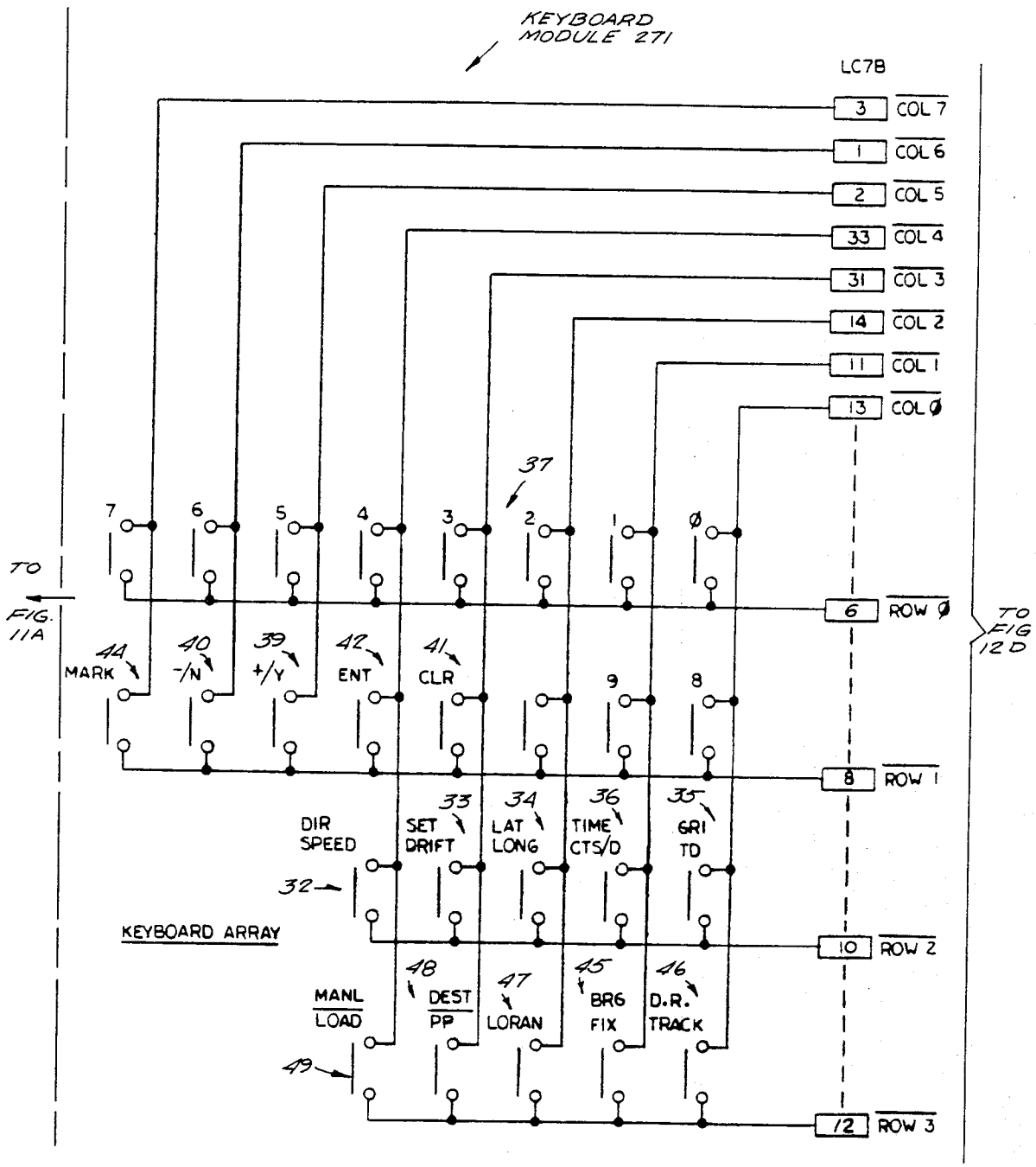
KEYBOARD MODULE 271
LC7B
3 COL 7
1 COL 6
2 COL 5
33 COL 4
31 COL 3
14 COL 2
11 COL 1
13 COL Ø
6 ROW Ø
8 ROW 1
10 ROW 2
12 ROW 3
TO FIG. 11A
TO FIG 12D
37
7 6 5 4 3 2 1 Ø
9 8
44 MARK
40 -/N
39 +/Y
42 ENT
41 CLR
33 SET DRIFT
34 LAT LONG
36 TIME CTS/D
35 GRI TD
DIR SPEED
32
KEYBOARD ARRAY
48 DEST PP
47 LORAN
45 BRG FIX
46 D.R. TRACK
MANL LOAD
49

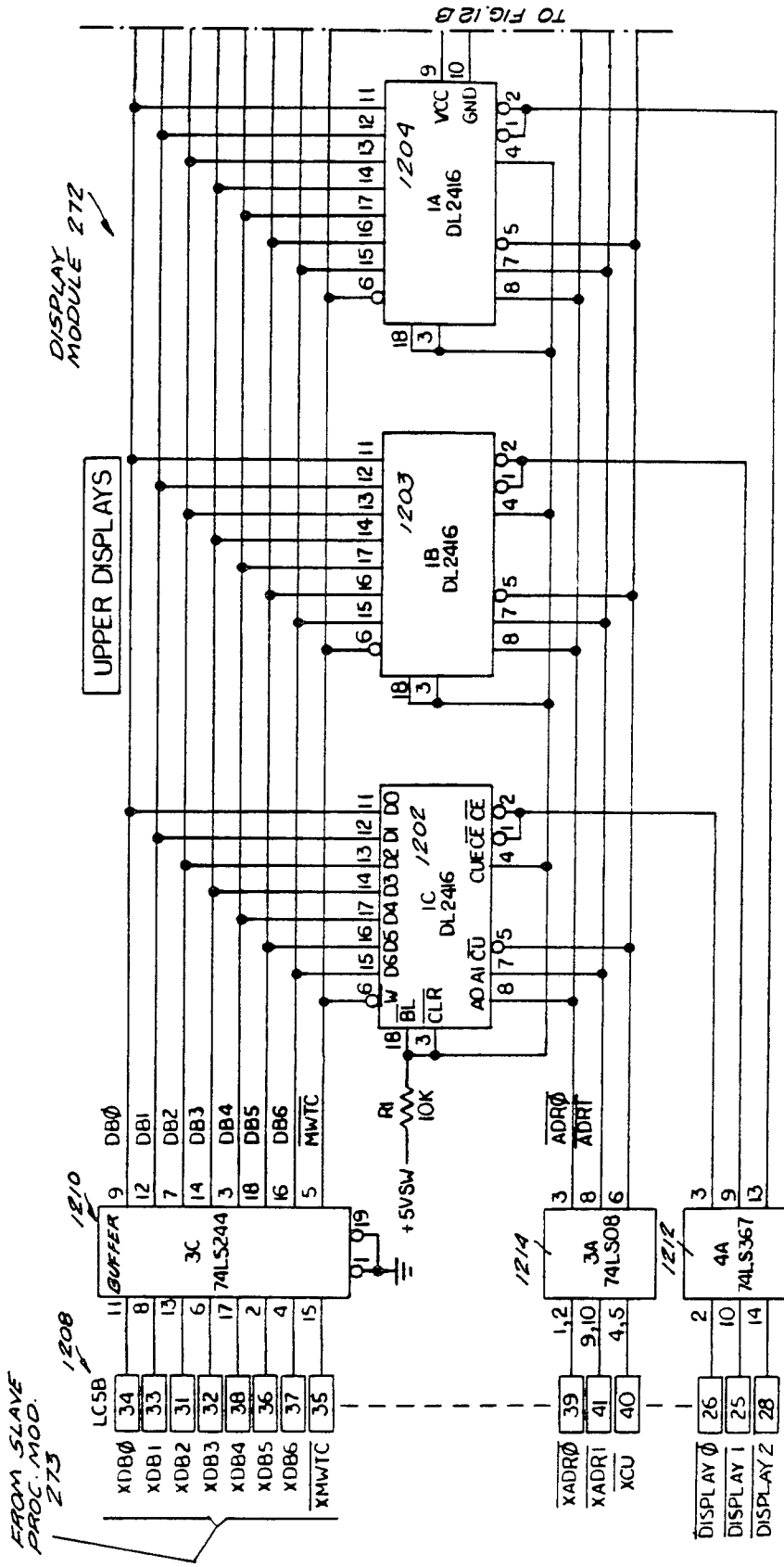
TO FIG. 12B
DISPLAY MODULE 272
UPPER DISPLAYS
1204
1A
DL2416
VCC
GND
1203
1B
DL2416
1202
1C
DL2416
D6 D5 D4 D3 D2 D1 D0
AD A1 CU
CLR
BL
CUE CE CE
R1
10K
+5VSW
DB0
DB1
DB2
DB3
DB4
DB5
DB6
MWTC
1210
BUFFER
3C
74LS244
1214
3A
74LS08
ADR0
ADR1
1212
4A
74LS367
1208
LCSB
XDB0
XDB1
XDB2
XDB3
XDB4
XDB5
XDB6
XMWTC
XADR0
XADR1
XCU
DISPLAY 0
DISPLAY 1
DISPLAY 2
FROM SLAVE PROC. MOD. 275

Fig. 12A

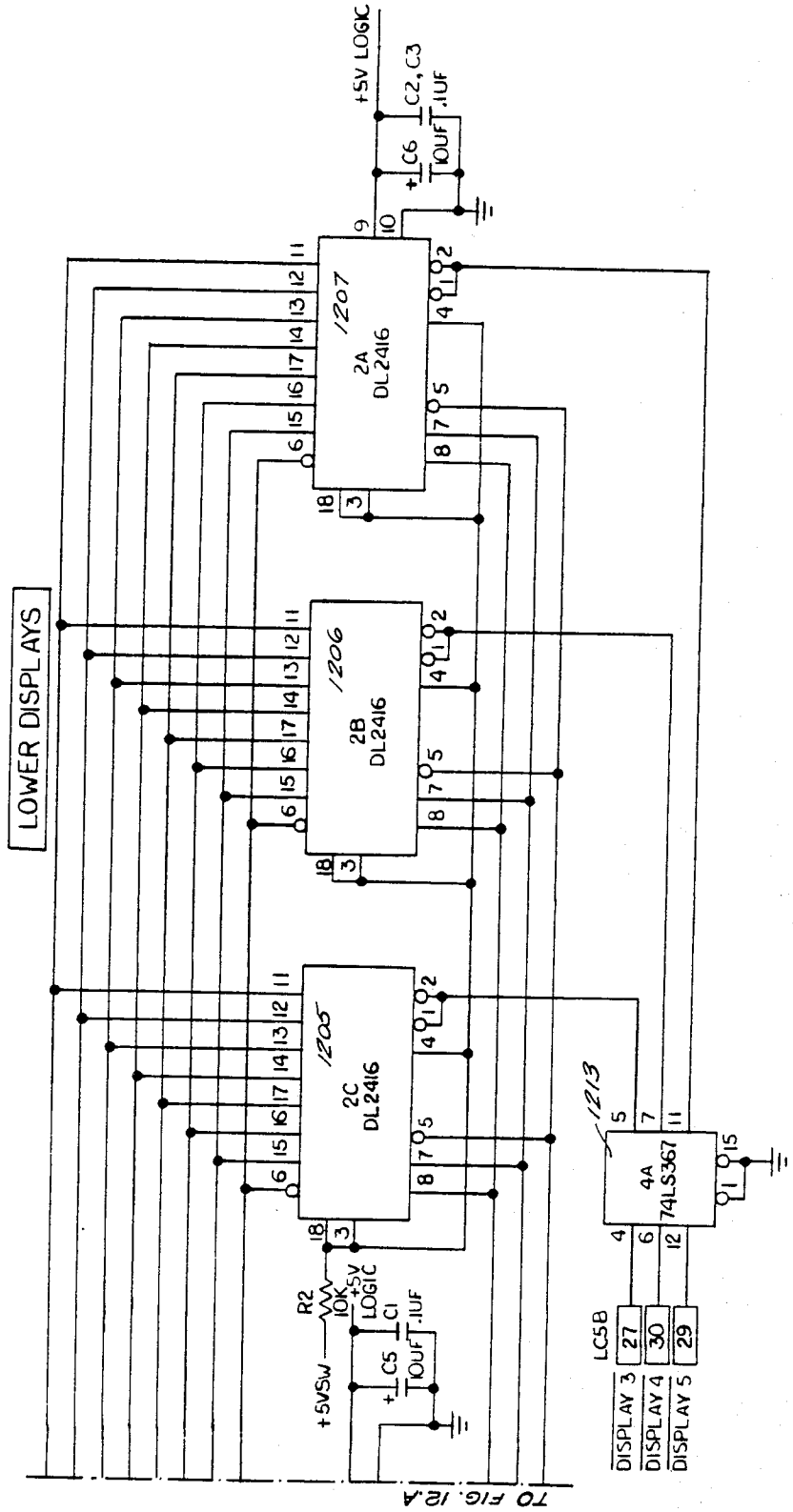
LOWER DISPLAYS
+5V LOGIC
C2, C3
.1UF
C6
10UF
1207
2A
DL2416
1206
2B
DL2416
1205
2C
DL2416
1213
4A
74LS367
R2
10K
+5V LOGIC
C1
.1UF
C5
10UF
+5VSW
LC5B
DISPLAY 3
DISPLAY 4
DISPLAY 5
TO FIG. 12A

FIG. 12B

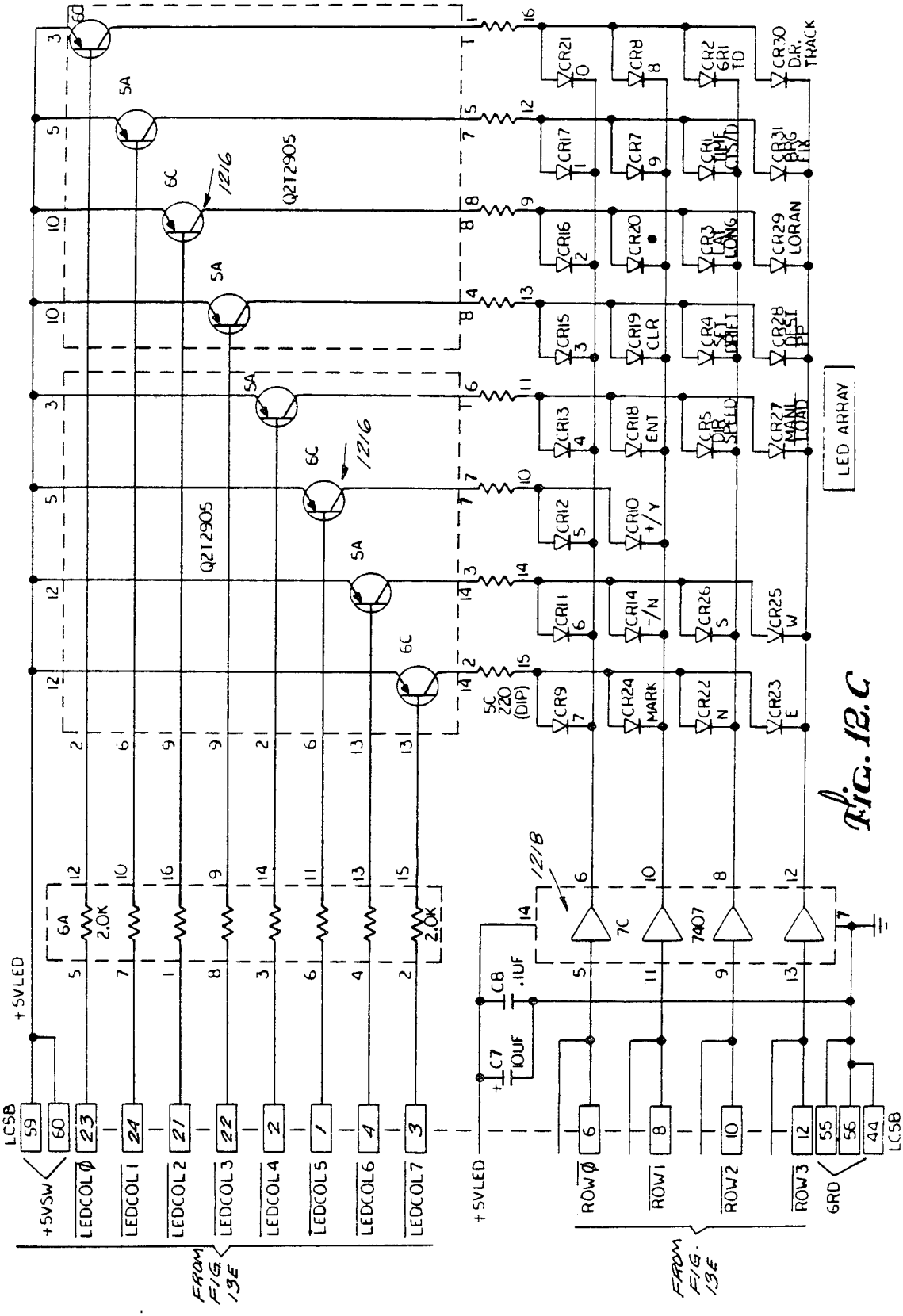
LCSB
+5VSW
LEDCOLØ
LEDCOL1
LEDCOL2
LEDCOL3
LEDCOL4
LEDCOL5
LEDCOL6
LEDCOL7
FROM FIG. 13E
+5VLED
ROWØ
ROW1
ROW2
ROW3
GRD
Q2T2905
5A
6C
1216
1218
7C
7407
C7 10UF
C8 .1UF
5C 220 (DIP)
CR9 7
CR24 MARK
CR22 N
CR23 E
CR11 6
CR14 -/N
CR26 S
CR25 W
CR12 5
CR10 +/Y
CR13 4
CR18 ENT
CR5 DIR SPEED
CR27 MANL LOAD
CR15 3
CR19 CLR
CR4 SET DRIFT
CR28 DEST PP
CR16 2
CR20
CR3 LAT LONG
CR29 LORAN
CR17 1
CR7 9
CR1 TIME CTS/D
CR31 BRG FIX
CR21 0
CR8 8
CR2 GR1 TD
CR30 D.R. TRACK
LED ARRAY

FIG. 12.C

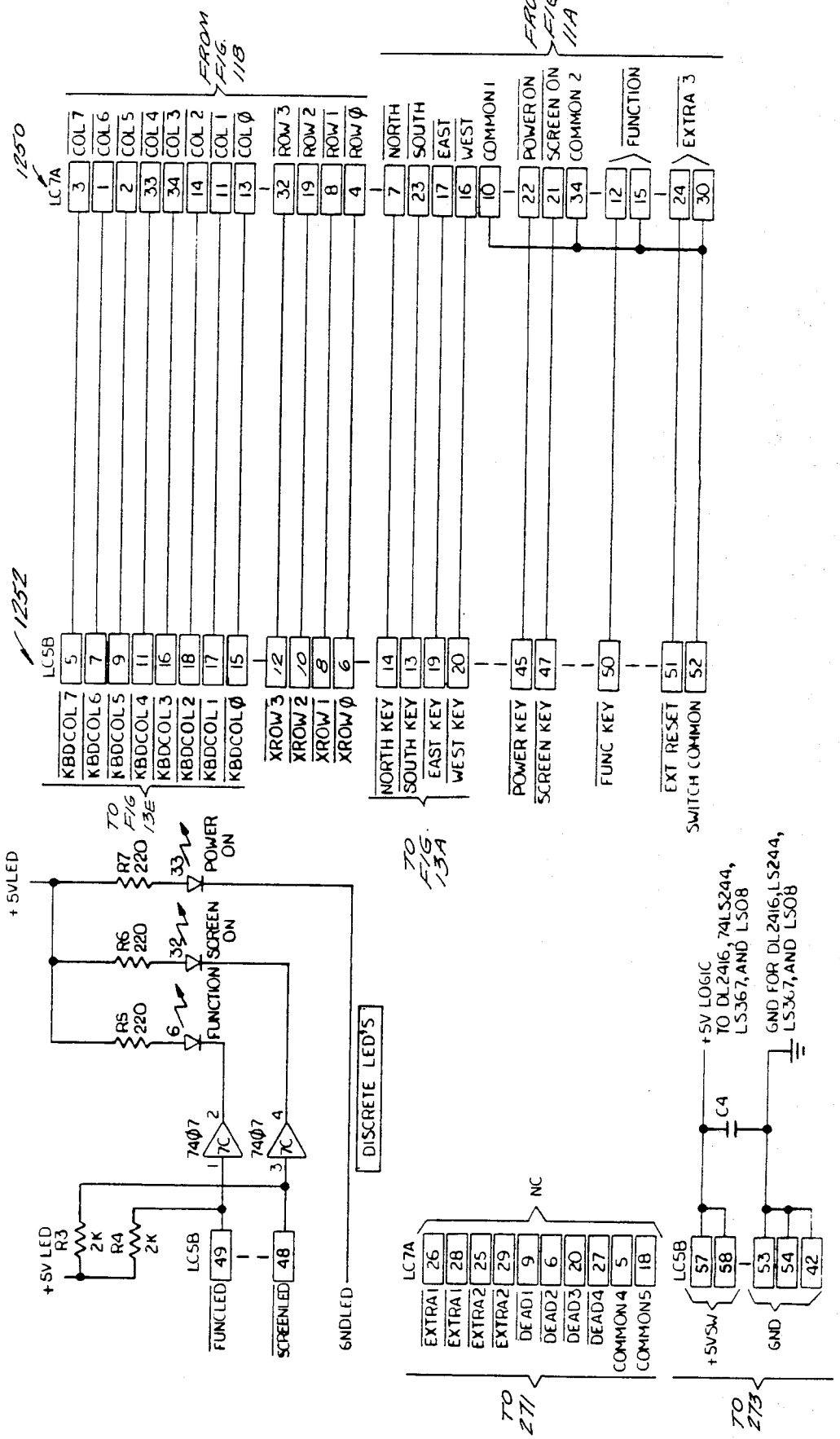
FROM FIG. 11B
FROM FIG. 11A
1250
LC7A
COL 7
COL 6
COL 5
COL 4
COL 3
COL 2
COL 1
COL Ø
ROW 3
ROW 2
ROW 1
ROW Ø
NORTH
SOUTH
EAST
WEST
COMMON 1
POWER ON
SCREEN ON
COMMON 2
FUNCTION
EXTRA 3
1252
LC5B
KBDCOL 7
KBDCOL 6
KBDCOL 5
KBDCOL 4
KBDCOL 3
KBDCOL 2
KBDCOL 1
KBDCOL Ø
XROW 3
XROW 2
XROW 1
XROW Ø
NORTH KEY
SOUTH KEY
EAST KEY
WEST KEY
POWER KEY
SCREEN KEY
FUNC KEY
EXT RESET
SWITCH COMMON
TO FIG 13E
TO FIG 13A
+5VLED
R7 220
R6 220
R5 220
POWER ON
SCREEN ON
FUNCTION
DISCRETE LED'S
74Ø7
+5V LED
R3 2K
R4 2K
FUNCLED
SCREENLED
GNDLED
NC
EXTRA1
EXTRA1
EXTRA2
EXTRA2
DEAD1
DEAD2
DEAD3
DEAD4
COMMON4
COMMON5
C4
+5V LOGIC
TO DL2416, 74LS244, LS367, AND LS08
GND FOR DL2416, LS244, LS367, AND LS08
+5VSW
GND
TO 271
TO 273

Fig. 12.D

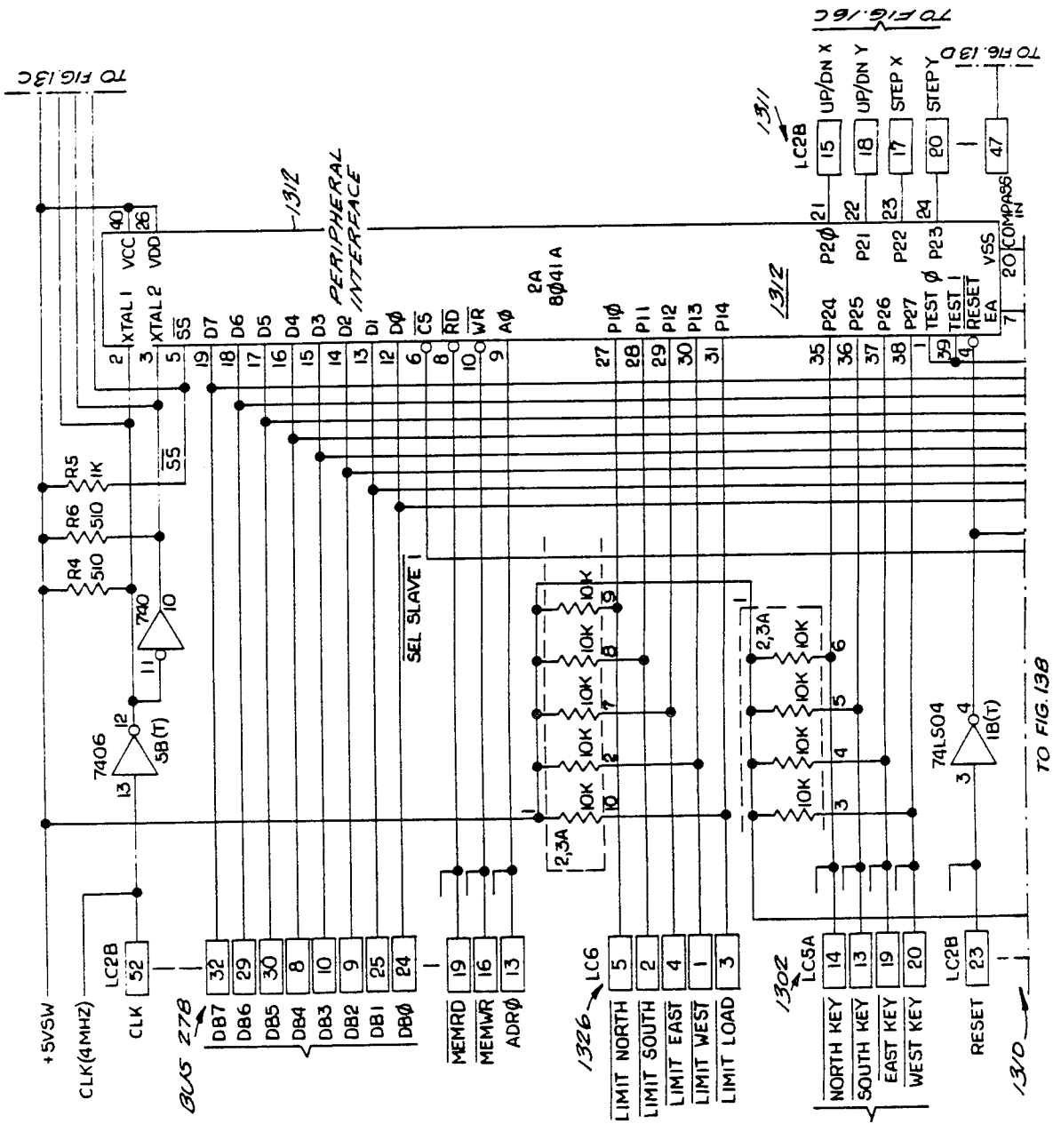
TO FIG. 13C
TO FIG. 16C
TO FIG. 13D
PERIPHERAL INTERFACE
1312
1311
LC2B
UP/DN X
UP/DN Y
STEP X
STEP Y
COMPASS IN
2A 8Ø41A
XTAL 1
XTAL 2
VCC
VDD
SS
D7
D6
D5
D4
D3
D2
D1
DØ
CS
RD
WR
AØ
P1Ø
P11
P12
P13
P14
P24
P25
P26
P27
TEST Ø
TEST 1
RESET
EA
VSS
P2Ø
P21
P22
P23
R5 1K
R6 510
R4 510
740
7406
5B(T)
SEL SLAVE 1
10K
2,3A
74LS04
1B(T)
TO FIG. 13B
+5VSW
CLK(4MHZ)
CLK
BUS 278
DB7
DB6
DB5
DB4
DB3
DB2
DB1
DBØ
MEMRD
MEMWR
ADRØ
LC6
1326
LIMIT NORTH
LIMIT SOUTH
LIMIT EAST
LIMIT WEST
LIMIT LOAD
1302
LC5A
NORTH KEY
SOUTH KEY
EAST KEY
WEST KEY
RESET
1310
SLAVE PROCESSOR MODULE 273
FROM FIG. 12D

FIG. 13A

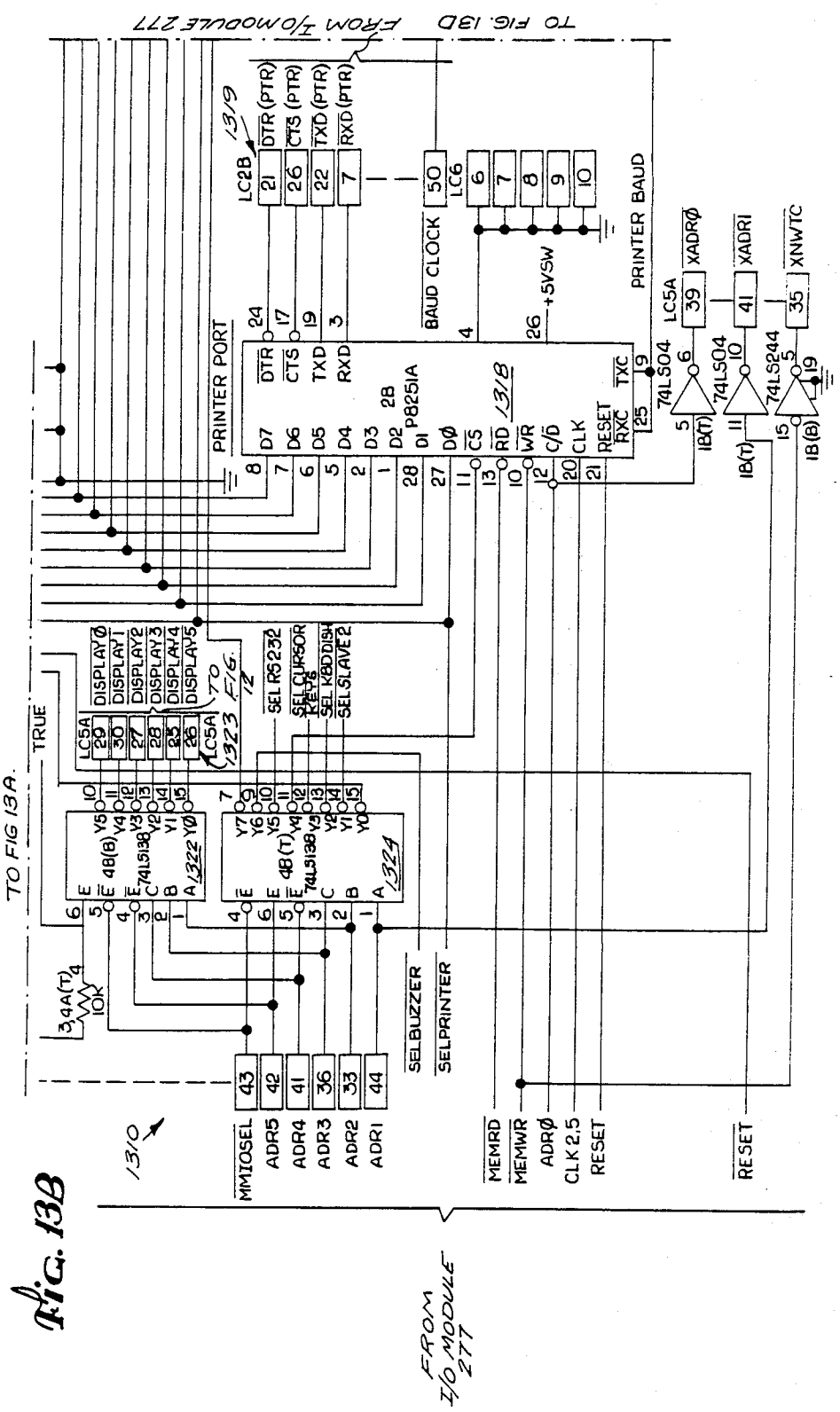
TO FIG. 13D FROM I/O MODULE 277
PRINTER PORT
LC2B
1319
DTR (PTR)
CTS (PTR)
TXD (PTR)
RXD (PTR)
BAUD CLOCK
LC6
+5VSW
PRINTER BAUD
LC5A
XADRØ
XADRI
XNWTC
74LS04
74LS244
P8251A
1318
D7 D6 D5 D4 D3 D2 D1 DØ
DTR CTS TXD RXD
RXC TXC
RESET CLK C/D WR RD CS
IB(T)
IB(B)
TRUE
TO FIG 13A.
DISPLAYØ
DISPLAY1
DISPLAY2
DISPLAY3
DISPLAY4
DISPLAY5
TO 1323 FIG. 12
SEL RS232
SEL CURSOR KEYS
SEL KBDDISH
SEL SLAVE2
74LS138
48(B)
48(T)
1322
1324
34A(T)4
10K
SELBUZZER
SELPRINTER
MMIOSEL
ADR5
ADR4
ADR3
ADR2
ADR1
MEMRD
MEMWR
ADRØ
CLK 2.5
RESET
1310
FROM I/O MODULE 277

Fig. 13B

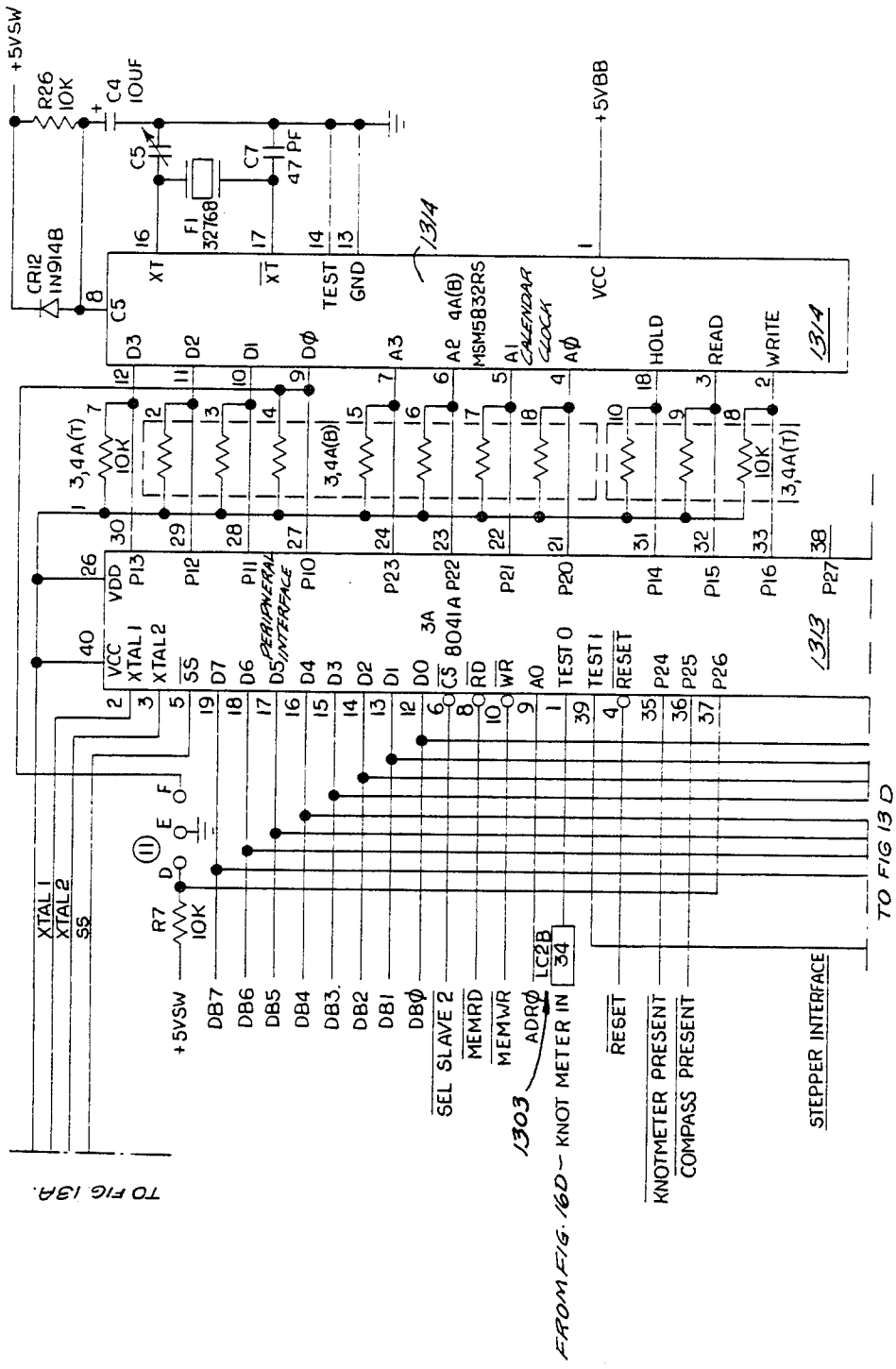
+5VSW
R26 10K
C4 10UF
C5
C7 47 PF
F1 32768
CR12 1N914B
+5VBB
1314
XT
TEST
GND
VCC
4A(B) MSM5832RS
CALENDAR CLOCK
HOLD
READ
WRITE
3,4A(T) 10K
3,4A(B)
VDD
PERIPHERAL INTERFACE
3A 8041A
XTAL 1
XTAL 2
SS
TEST 0
TEST 1
RESET
1313
R7 10K
+5VSW
DB7
DB6
DB5
DB4
DB3
DB2
DB1
DBØ
SEL SLAVE 2
MEMRD
MEMWR
ADRØ
LC2B 34
1303
FROM FIG. 16D – KNOT METER IN
RESET
KNOTMETER PRESENT
COMPASS PRESENT
STEPPER INTERFACE
TO FIG 13D
TO FIG 13A.

FIG. 13C

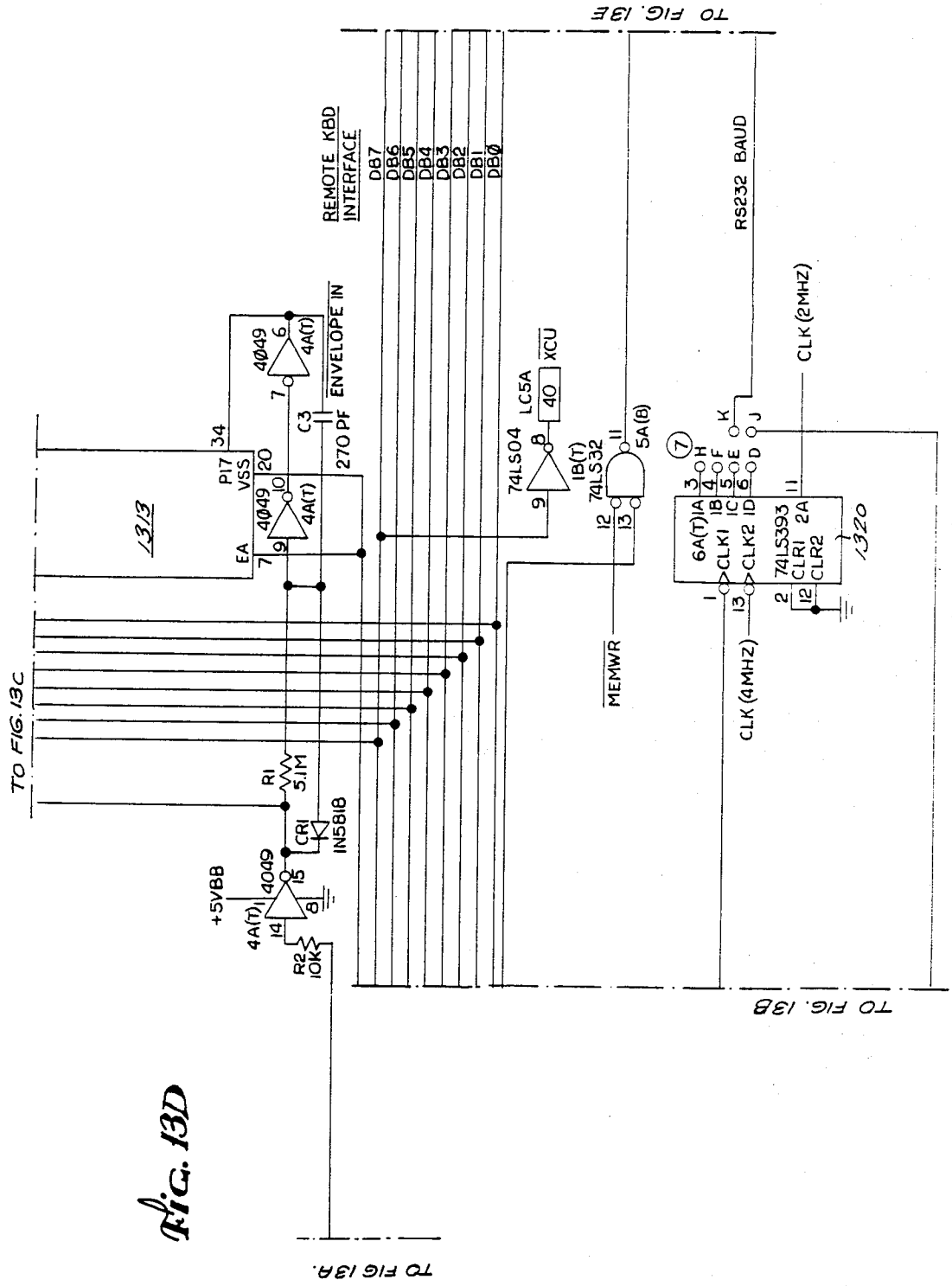
TO FIG. 13E
REMOTE KBD INTERFACE
DB7
DB6
DB5
DB4
DB3
DB2
DB1
DBØ
RS232 BAUD
CLK (2MHZ)
ENVELOPE IN
4Ø49
4A(T)
C3
270 PF
P17
VSS
EA
1313
74LS04
LC5A
40
XCU
1B(T)
74LS32
5A(B)
6A(T)
CLK1
CLK2
74LS393
CLR1
CLR2
1320
MEMWR
CLK (4MHZ)
TO FIG. 13C
R1
5.1M
CR1
IN5818
+5VBB
R2
10K
TO FIG. 13B
TO FIG 13A.

FIG. 13D

Fig. 13E

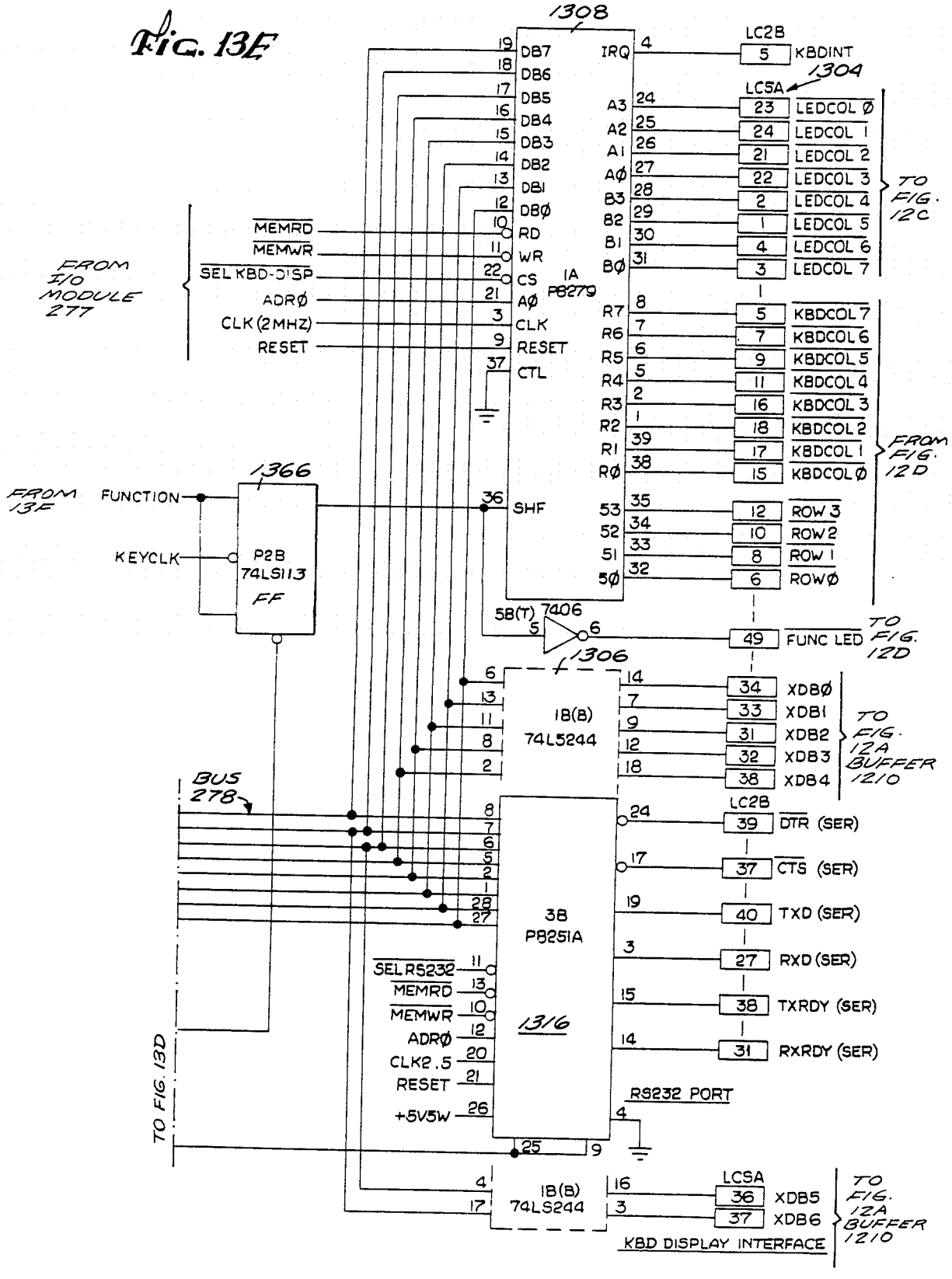
1308
DB7
DB6
DB5
DB4
DB3
DB2
DB1
DB0
RD
WR
CS
A0
CLK
RESET
CTL
IA
P8279
IRQ
A3
A2
A1
A0
B3
B2
B1
B0
R7
R6
R5
R4
R3
R2
R1
R0
SHF
SB(T)
7406
LC2B
KBDINT
1304
LC5A
LEDCOL 0
LEDCOL 1
LEDCOL 2
LEDCOL 3
LEDCOL 4
LEDCOL 5
LEDCOL 6
LEDCOL 7
TO FIG. 12C
KBDCOL 7
KBDCOL 6
KBDCOL 5
KBDCOL 4
KBDCOL 3
KBDCOL 2
KBDCOL 1
KBDCOL 0
FROM FIG. 12D
ROW 3
ROW 2
ROW 1
ROW 0
FUNC LED
TO FIG. 12D
FROM I/O MODULE 277
MEMRD
MEMWR
SEL KBD-DISP
ADR0
CLK (2 MHZ)
RESET
FROM 13E
FUNCTION
KEYCLK
1366
P2B
74LS113
FF
1306
1B(B)
74LS244
XDB0
XDB1
XDB2
XDB3
XDB4
TO FIG. 12A BUFFER 1210
BUS 278
3B
P8251A
1316
LC2B
DTR (SER)
CTS (SER)
TXD (SER)
RXD (SER)
TXRDY (SER)
RXRDY (SER)
SELRS232
MEMRD
MEMWR
ADR0
CLK2.5
RESET
+5V5W
RS232 PORT
TO FIG. 13D
1B(B)
74LS244
LC5A
XDB5
XDB6
TO FIG. 12A BUFFER 1210
KBD DISPLAY INTERFACE

FIG. 13F

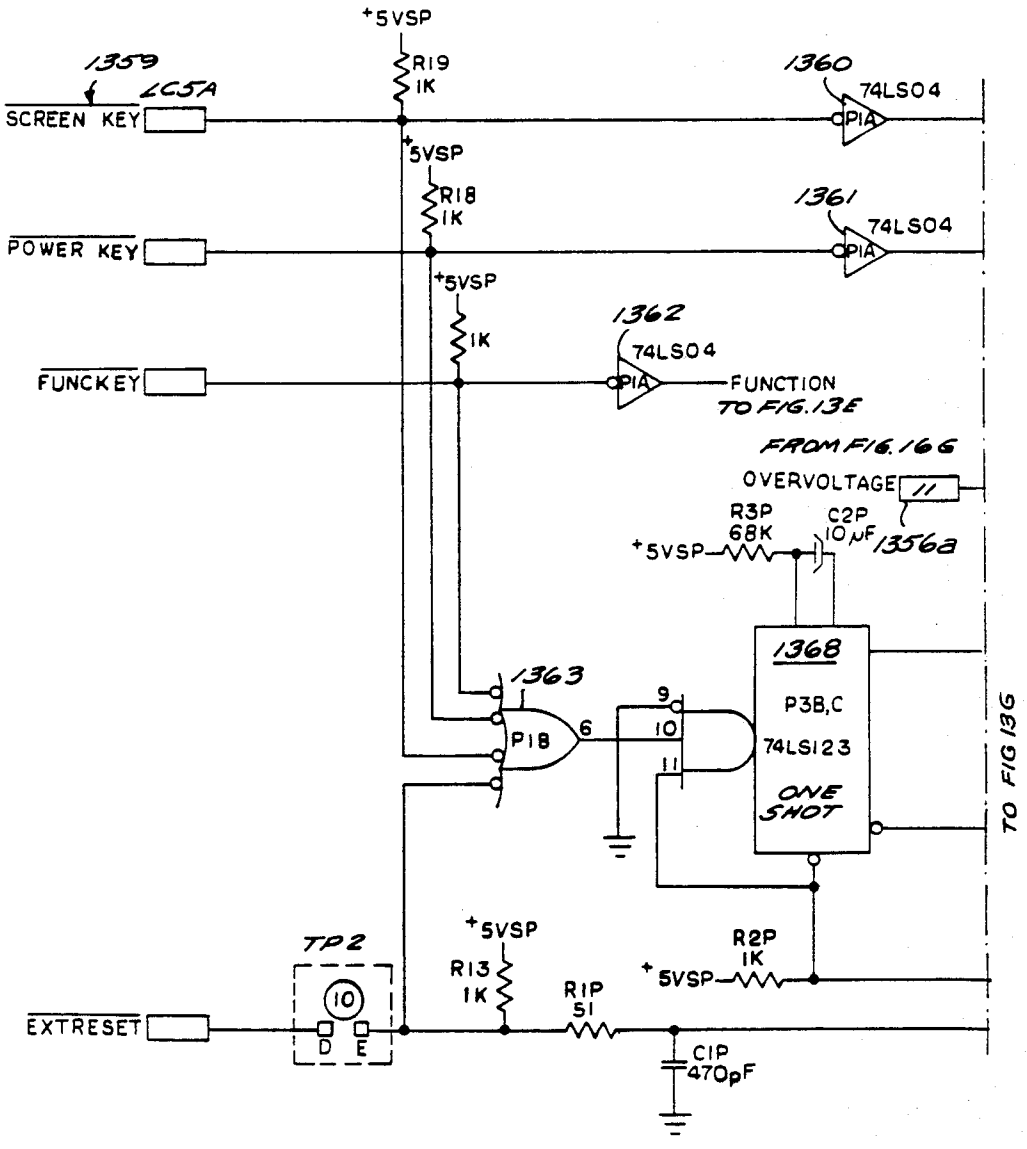
+5VSP
1359
LC5A
SCREEN KEY
R19
1K
1360
74LS04
PIA
+5VSP
R18
1K
1361
74LS04
POWER KEY
PIA
+5VSP
1K
1362
74LS04
FUNCKEY
PIA
FUNCTION
TO FIG. 13E
FROM F16. 16 G
OVERVOLTAGE
11
R3P
68K
C2P
10 NF
1356a
+5VSP
1368
P3B,C
74LS123
ONE SHOT
1363
P1B
9
10
11
6
TO FIG 13G
TP2
10
D
E
+5VSP
R13
1K
R1P
51
R2P
1K
+5VSP
EXTRESET
C1P
470pF

FIG. 13G

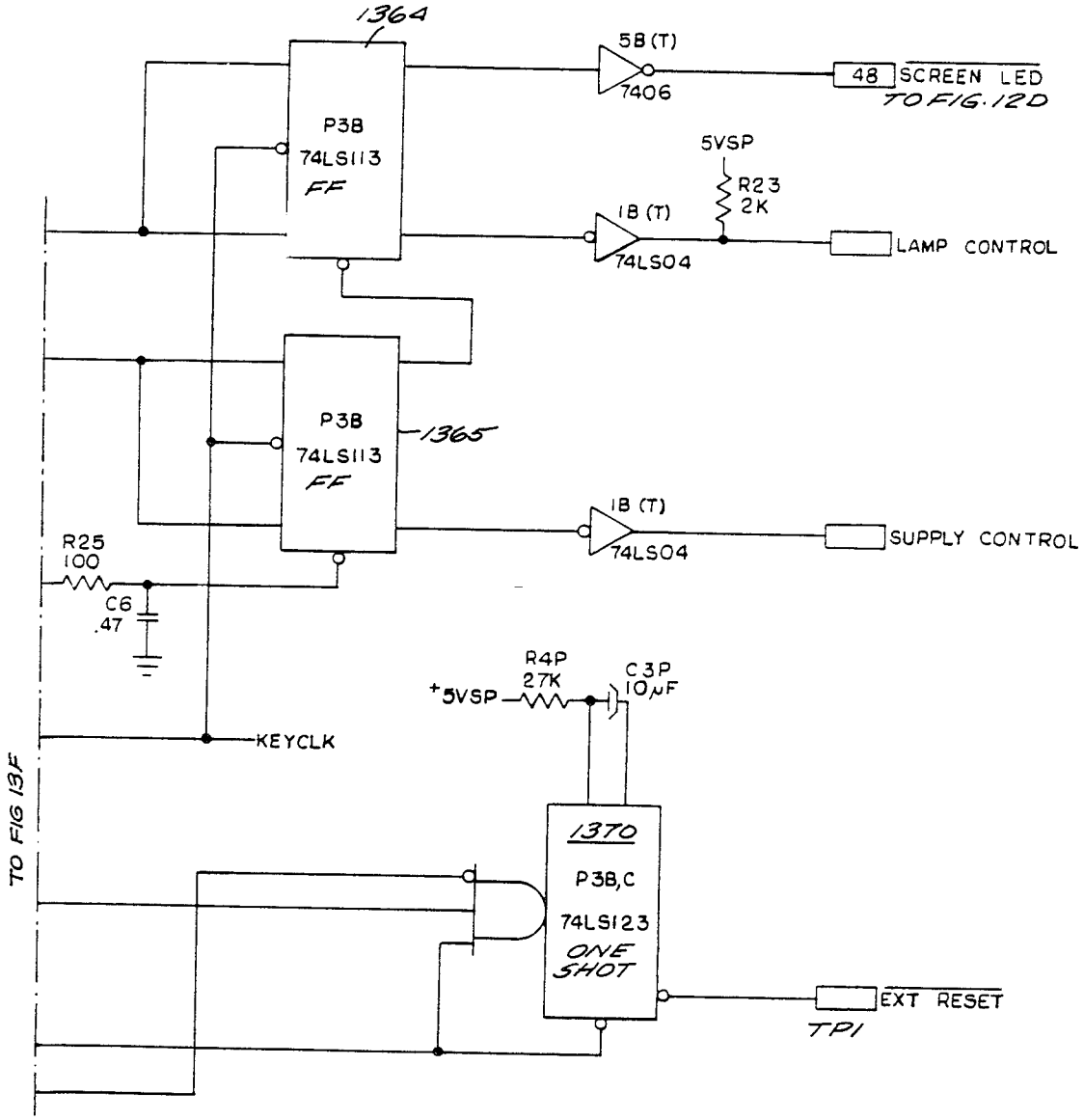
1364
P38
74LS113
FF
5B (T)
7406
48 SCREEN LED
TO FIG. 12D
5VSP
R23
2K
1B (T)
74LS04
LAMP CONTROL
P38
74LS113
FF
1365
1B (T)
74LS04
SUPPLY CONTROL
R25
100
C6
.47
R4P
27K
C3P
10μF
+5VSP
KEYCLK
TO FIG 13F
1370
P38,C
74LS123
ONE SHOT
EXT RESET
TP1

FIG. 13H

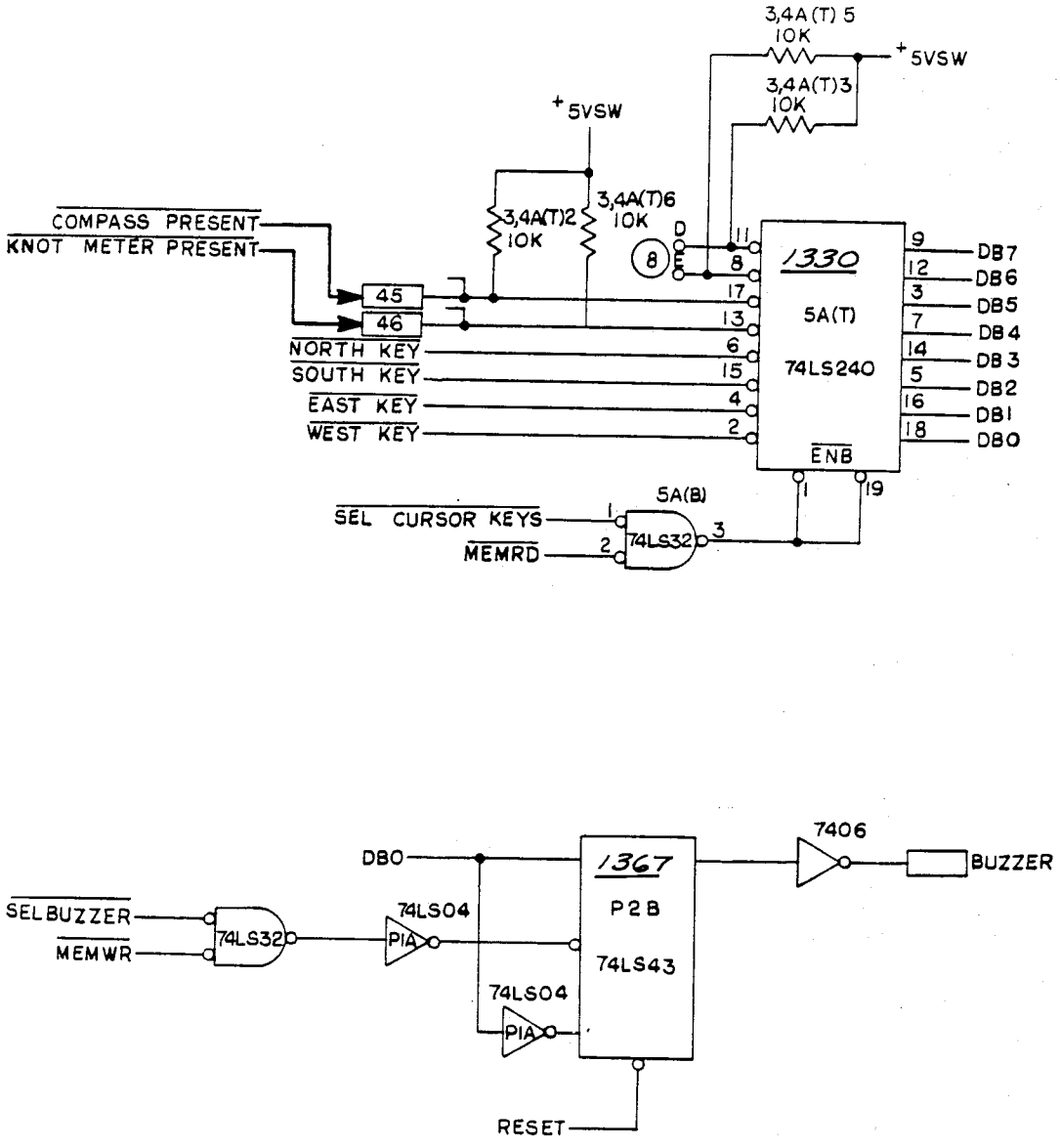
3,4A(T) 5
10K
+5VSW
3,4A(T)3
10K
+5VSW
3,4A(T)2
10K
3,4A(T)6
10K
COMPASS PRESENT
KNOT METER PRESENT
45
46
NORTH KEY
SOUTH KEY
EAST KEY
WEST KEY
8
1330
5A(T)
74LS240
ENB
DB7
DB6
DB5
DB4
DB3
DB2
DB1
DB0
5A(B)
SEL CURSOR KEYS
MEMRD
74LS32
DB0
SELBUZZER
MEMWR
74LS32
74LS04
PIA
74LS04
PIA
1367
P2B
74LS43
RESET
7406
BUZZER

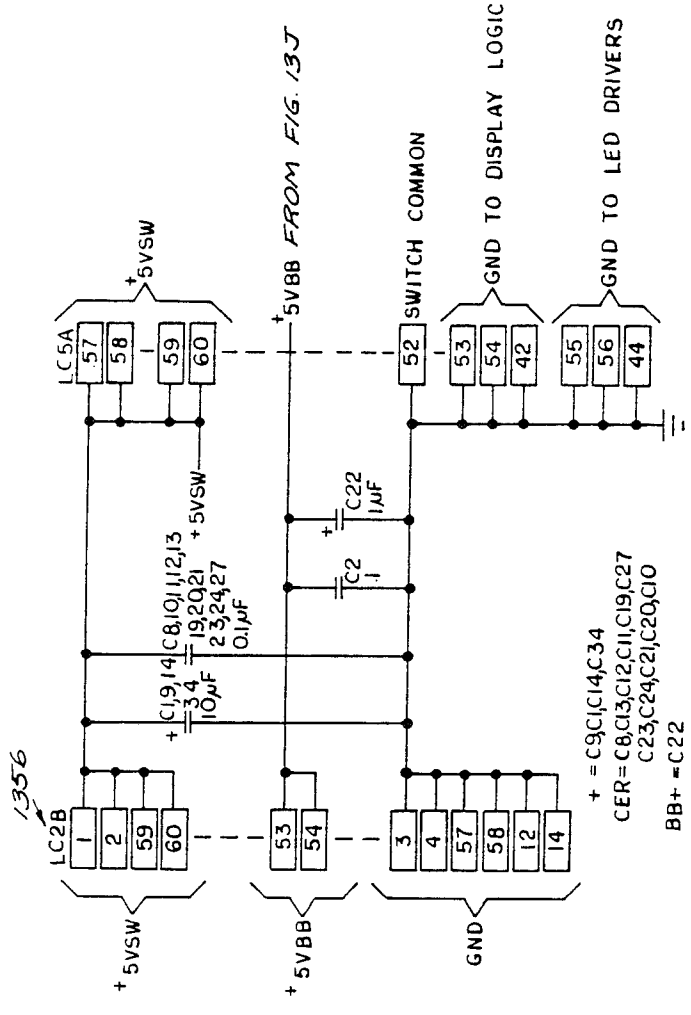
LC5A
LC2B
+5VSW
+5VBB FROM FIG. 13J
SWITCH COMMON
GND TO DISPLAY LOGIC
GND TO LED DRIVERS
C22 1μF
C2 1
C1,9,14 C34 10μF
C8,10,11,12,13 19,20,21 23,24,27 0.1μF
+ = C9,C1,C14,C34
CER = C8,C13,C12,C11,C19,C27 C23,C24,C21,C20,C10
BB+ = C22
BBCER = C2

FIG. 13I

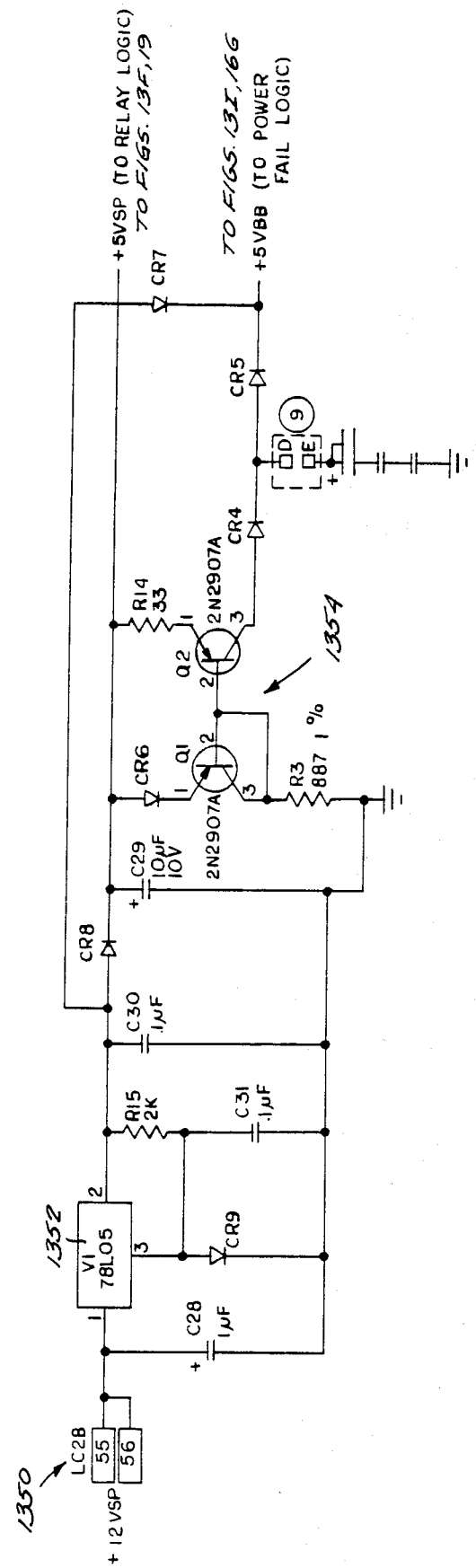
+5VSP (TO RELAY LOGIC)
TO FIGS. 13E,19
+5VBB (TO POWER FAIL LOGIC)
TO FIGS. 13E,16
CR7
CR5
CR4
CR6
CR8
CR9
R14 33
R15 2K
R3 887 1%
Q1 2N2907A
Q2 2N2907A
C29 10µF 10V
C30 .1µF
C31 .1µF
C28 1µF
V1 78L05
LC28
55
56
+12VSP
1350
1352
1354
9
D
E

FIG. 13J

Fig. 14A

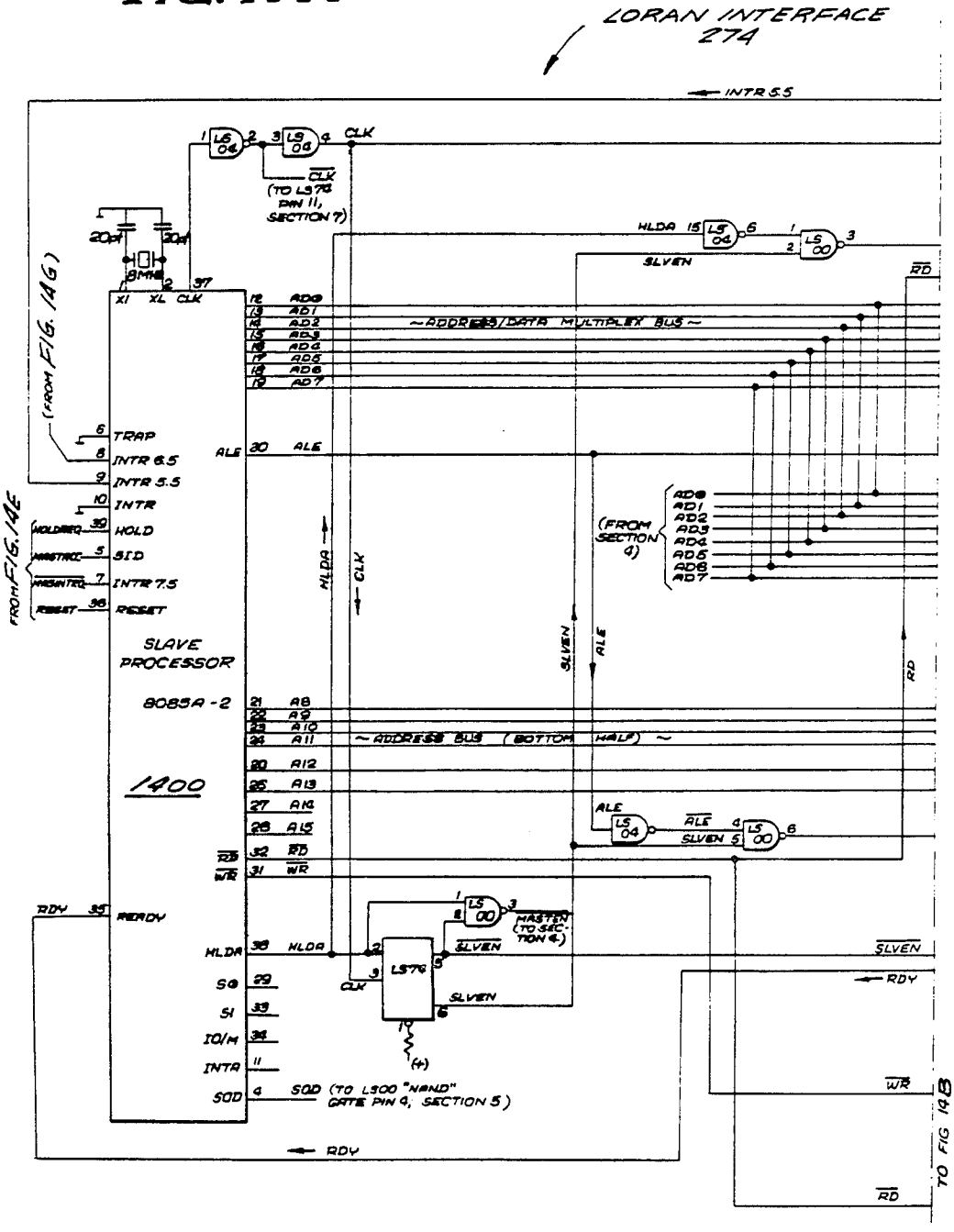
LORAN INTERFACE 274
INTR 5.5
CLK
(TO L378 PIN 11, SECTION 7)
HLDA
SLVEN
RD
ADDRESS/DATA MULTIPLEX BUS
AD0
AD1
AD2
AD3
AD4
AD5
AD6
AD7
(FROM FIG. 1AG)
TRAP
INTR 6.5
INTR 5.5
INTR
HOLD
SID
INTR 7.5
RESET
ALE
SLAVE PROCESSOR
8085A-2
1400
A8
A9
A10
A11
ADDRESS BUS (BOTTOM HALF)
A12
A13
A14
A15
WR
RDY
READY
HLDA
S0
S1
IO/M
INTA
SOD
SOD (TO L300 "NAND" GATE PIN 4, SECTION 5)
MASTEN (TO SECTION 4)
LS76
FROM FIG. 14E
TO FIG 14B

Fig. 14B

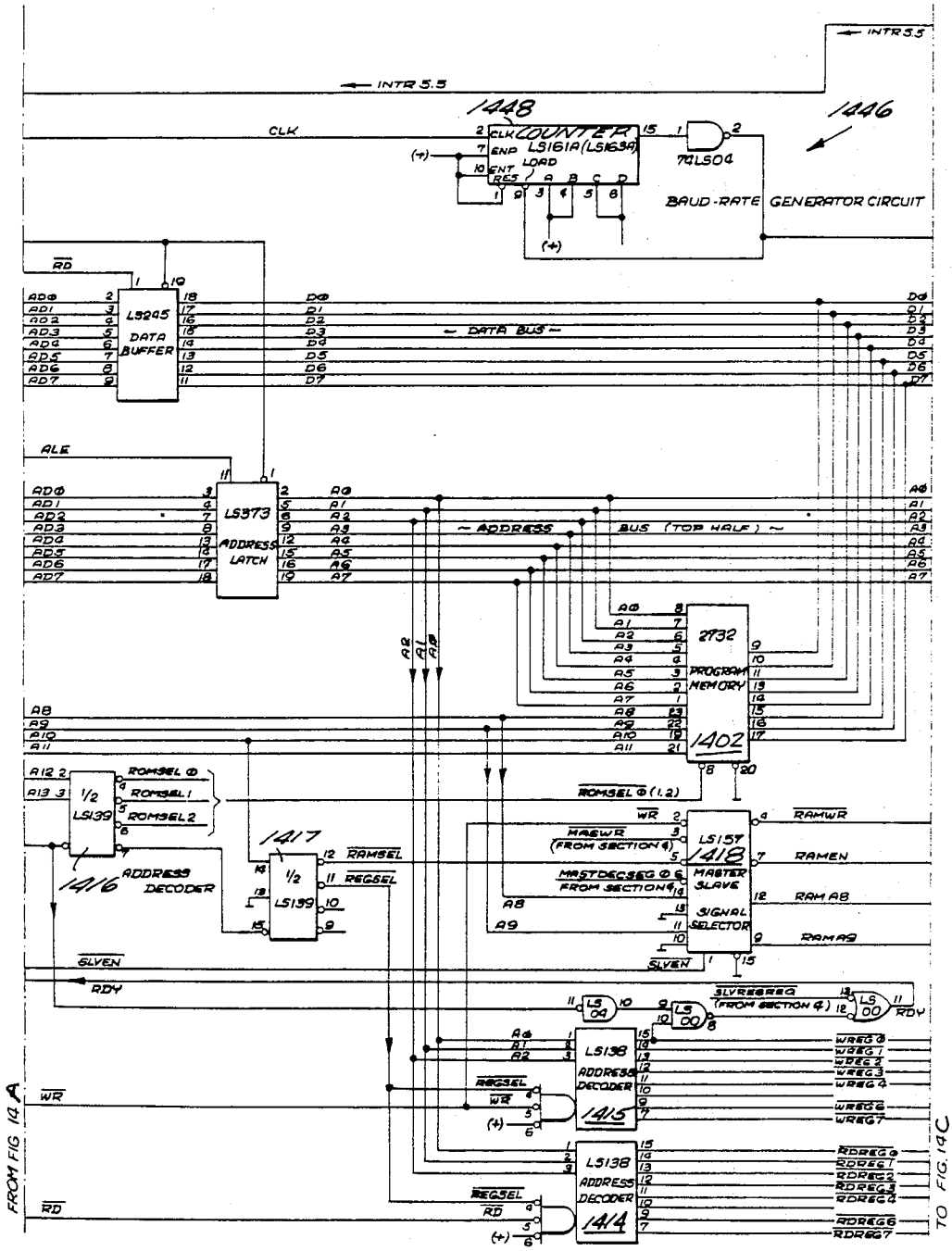
INTR 5.5
1448
COUNTER
LS161A (LS163A)
CLK
74LS04
1446
BAUD-RATE GENERATOR CIRCUIT
RD
LS245
DATA BUFFER
DATA BUS
ALE
LS373
ADDRESS LATCH
ADDRESS BUS (TOP HALF)
2732
PROGRAM MEMORY
1402
ROMSEL 0 (1,2)
WR
MASWR (FROM SECTION 4)
LS157
1418
MASTER SLAVE SIGNAL SELECTOR
RAMWR
RAMEN
RAM A8
RAM A9
SLVEN
RDY
SLVREGREQ (FROM SECTION 4)
LS 04
LS 00
LS138
ADDRESS DECODER
1415
1414
REGSEL
WREG 0
WREG 1
WREG 2
WREG 3
WREG 4
WREG 6
WREG 7
RDREG 0
RDREG 1
RDREG 2
RDREG 3
RDREG 4
RDREG 6
RDREG 7
LS139
1/2
ADDRESS DECODER
1416
1417
RAMSEL
REGSEL
FROM FIG 14A
TO FIG. 14C

Fig. 14C

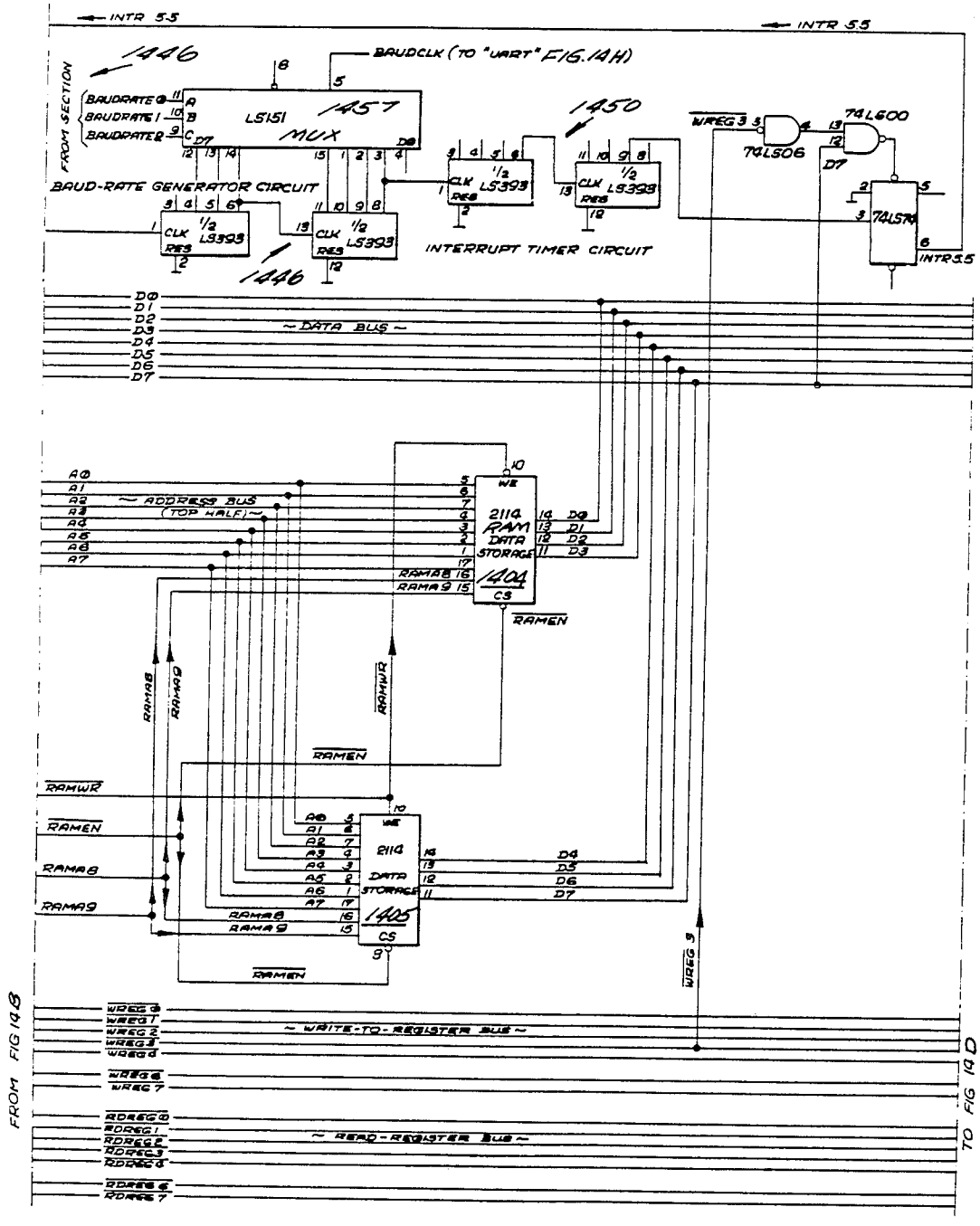
INTR 5.5
INTR 5.5
1446
BAUDCLK (TO "UART" FIG. 14H)
FROM SECTION
BAUDRATE 0
BAUDRATE 1
BAUDRATE 2
LS151
1457
MUX
1450
74LS00
74LS06
BAUD-RATE GENERATOR CIRCUIT
1/2 LS393
INTERRUPT TIMER CIRCUIT
74LS74
INTR5.5
DATA BUS
ADDRESS BUS (TOP HALF)
2114 RAM DATA STORAGE
1404
1405
RAMEN
RAMWR
RAMA8
RAMA9
WRITE-TO-REGISTER BUS
READ-REGISTER BUS
FROM FIG 14B
TO FIG 14D

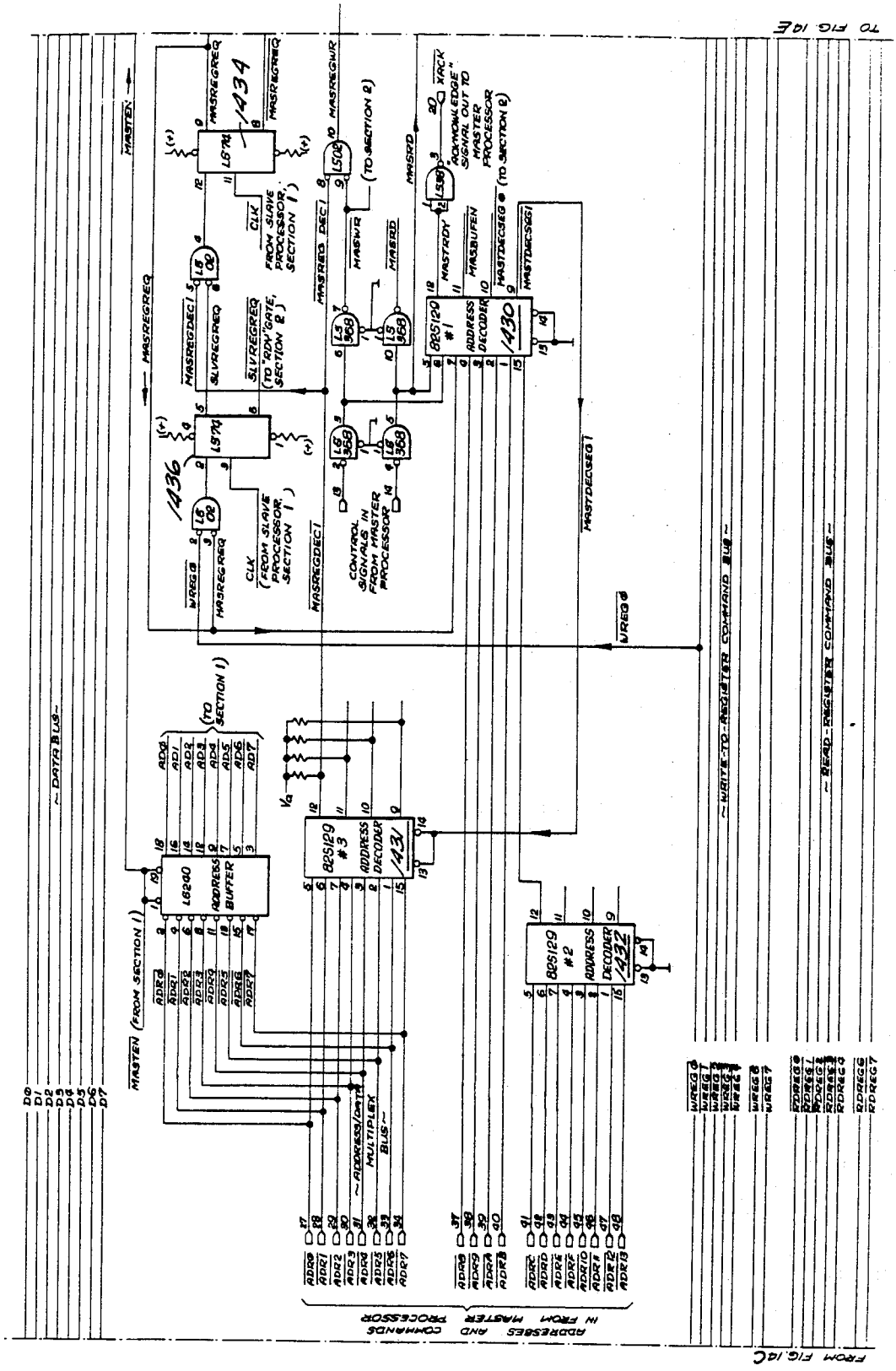
TO FIG. 14E
FROM FIG. 14C
~DATA BUS~
~WRITE-TO-REGISTER COMMAND BUS~
~READ-REGISTER COMMAND BUS~
~ADDRESS/DATA MULTIPLEX BUS~
ADDRESSES AND COMMANDS IN FROM MASTER PROCESSOR
MASTEN (FROM SECTION 1)
MASTEN
MASREGREQ
MASREGDEC1
MASREGWR
MASRD
MASWR
MASTRDY
MASBUFEN
MASTDECSEG1
MASTDECSEG0
WREG0
WREG1
WREG2
WREG3
WREG4
WREG5
WREG6
WREG7
RDREG0
RDREG1
RDREG2
RDREG3
RDREG4
RDREG5
RDREG6
RDREG7
LS74
LS02
LS368
LS240
ADDRESS BUFFER
82S129 #1
82S129 #2
82S129 #3
ADDRESS DECODER
1430
1431
1432
1434
1436
CLK (FROM SLAVE PROCESSOR, SECTION 1)
SLVREGREQ (TO "RDY" GATE, SECTION 2)
CLK (FROM SLAVE PROCESSOR, SECTION 1)
CONTROL SIGNALS IN FROM MASTER PROCESSOR
"ACKNOWLEDGE" SIGNAL OUT TO MASTER PROCESSOR
XACK
(TO SECTION 2)
(TO SECTION 1)
(TO SECTION 2)
(TO SECTION 2)
Va

Fig. 14D

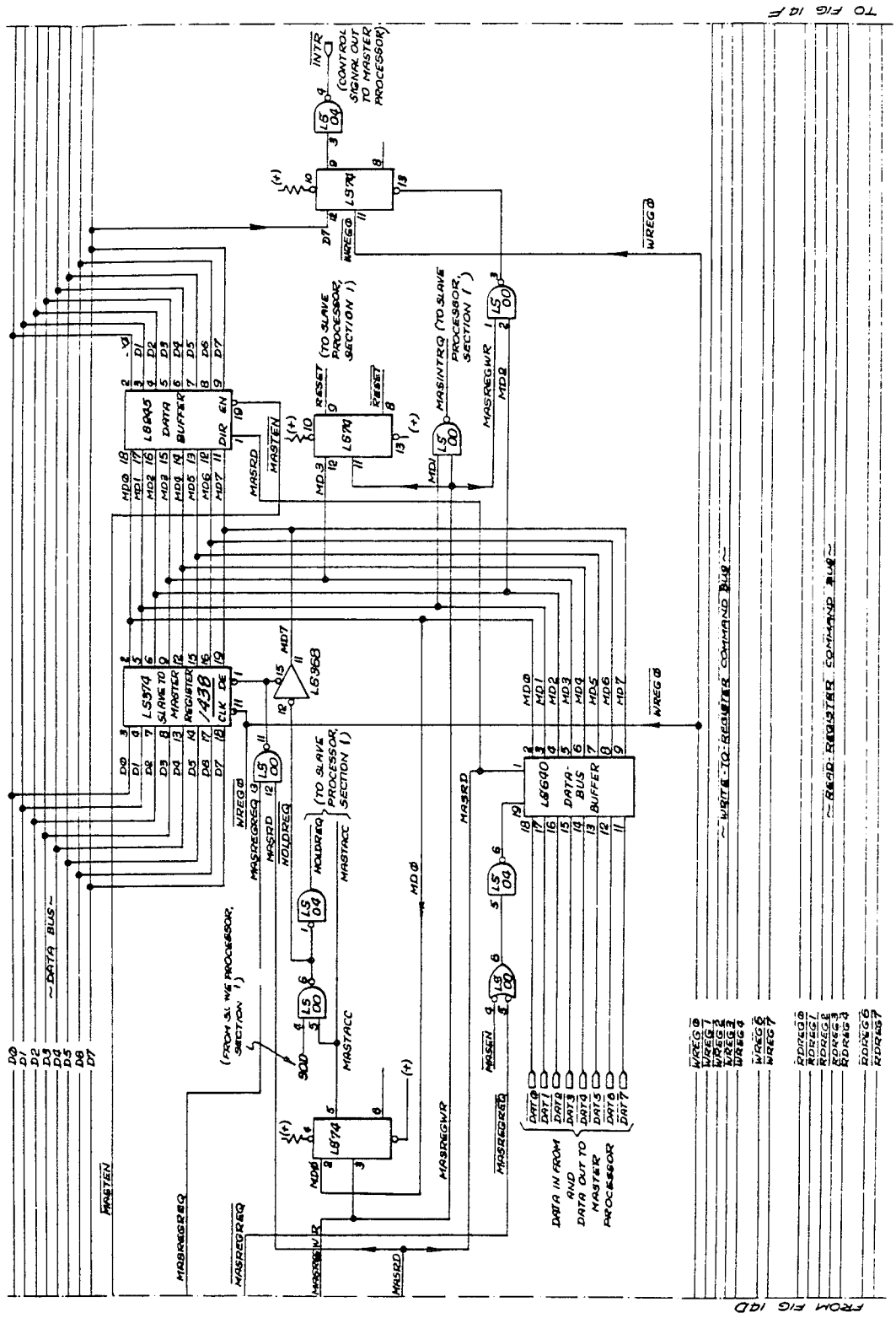
TO FIG 14F
FROM FIG 14D
~DATA BUS~
~WRITE-TO-REGISTER COMMAND BUS~
~READ-REGISTER COMMAND BUS~
LS374 SLAVE TO MASTER REGISTER 1438
LS845 DATA BUFFER
LS640 DATA-BUS BUFFER
LS74
LS00
LS04
LS368
(CONTROL SIGNAL OUT TO MASTER PROCESSOR)
(TO SLAVE PROCESSOR, SECTION 1)
(FROM SLAVE PROCESSOR, SECTION 1)
DATA IN FROM AND DATA OUT TO MASTER PROCESSOR
MASTEN
MASRD
MASREGWR
MASREGREQ
MASTACC
HOLDREQ
WREGØ
RDREGØ
RDREG1
RDREG2
RDREG3
RDREG4
RDREG5
RDREG6
RDREG7

FIG. 14E

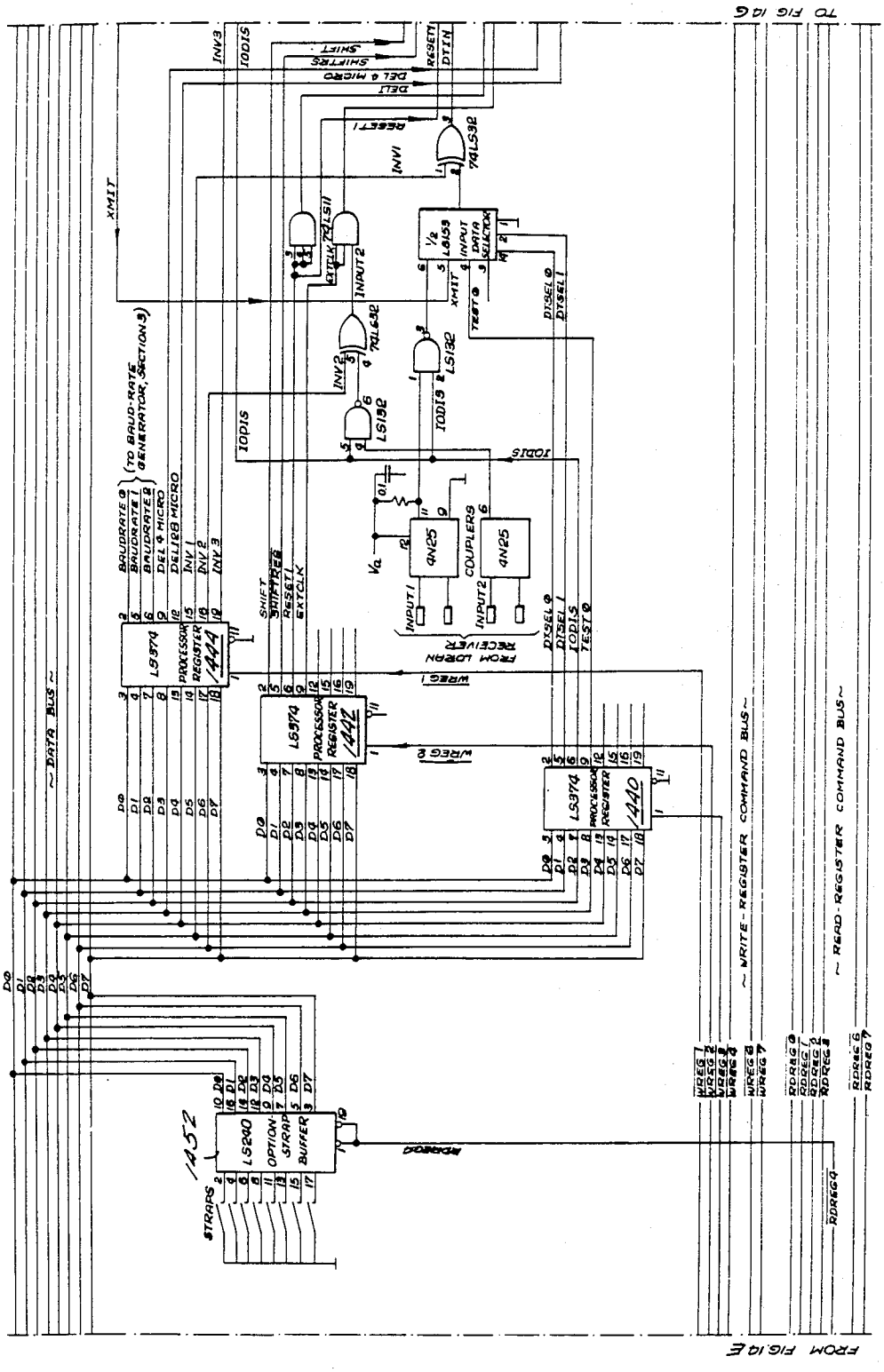
TO FIG 14G
FROM FIG 14E
~ DATA BUS ~
~ WRITE-REGISTER COMMAND BUS ~
~ READ-REGISTER COMMAND BUS ~
LS374 PROCESSOR REGISTER 1444
LS374 PROCESSOR REGISTER 1442
LS374 PROCESSOR REGISTER 1440
LS240 OPTION STRAP BUFFER
1452
STRAPS
4N25
COUPLERS
FROM LORAN RECEIVER
74LS32
74LS11
74LS32
LS132
LS132
LS153 INPUT DATA SELECTOR
(TO BAUD-RATE GENERATOR, SECTION 3)
BAUDRATE 0
BAUDRATE 1
BAUDRATE 2
DEL 4 MICRO
DEL 128 MICRO
INV 1
INV 2
INV 3
SHIFT
SHIFTRS
RESET1
DTIN
DEL1
DEL 4 MICRO
XMIT
IODIS
INPUT 1
INPUT 2
DTSEL 0
DTSEL 1
TEST 0
WREG 1
WREG 2
RDREG 0
RDREG 1
RDREG 2
RDREG 3
RDREG 4
RDREG 6
RDREG 7

Fig. 14F

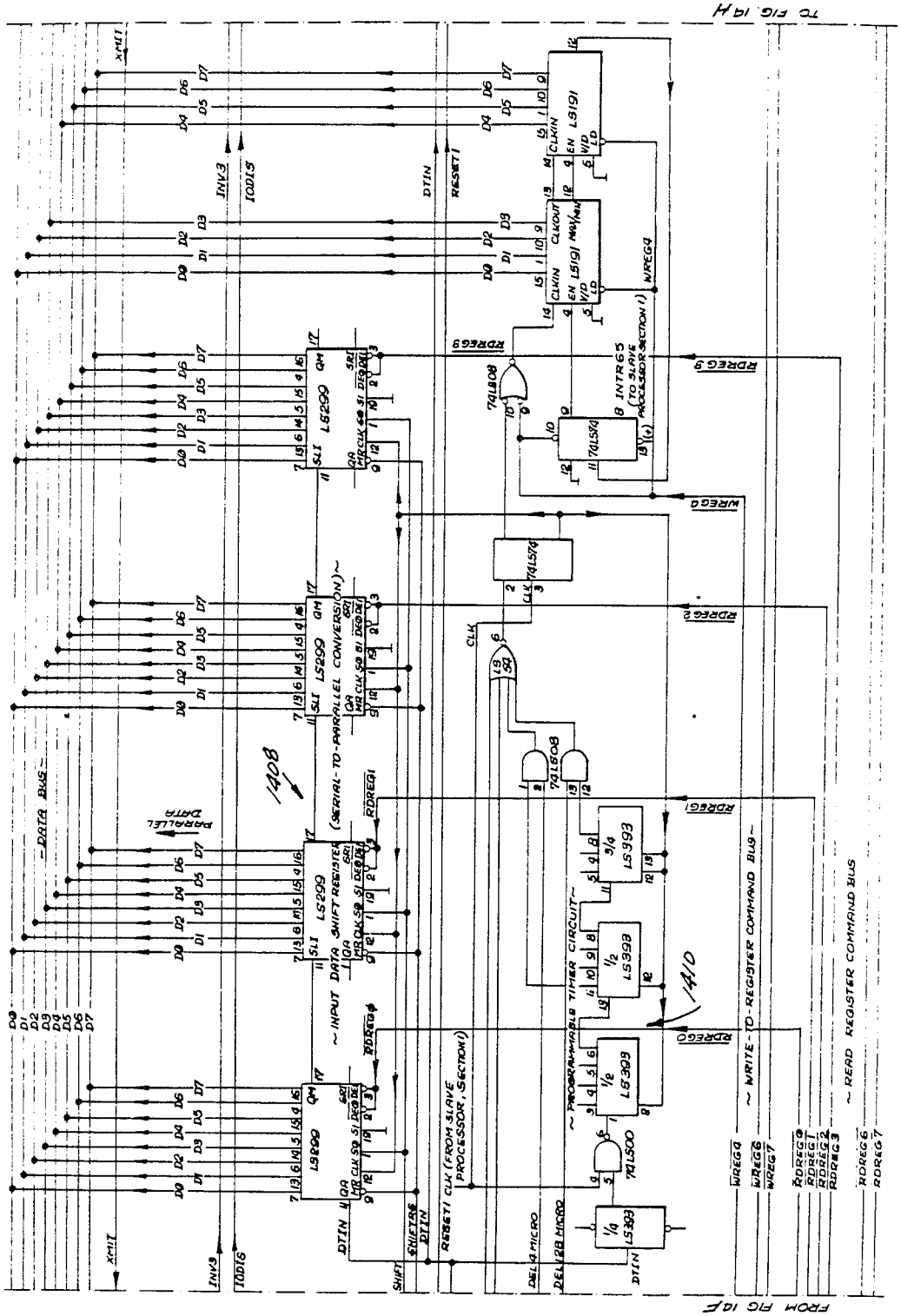
TO FIG. 14H
FROM FIG 14F
~ INPUT DATA SHIFT REGISTER (SERIAL-TO-PARALLEL CONVERSION)~
~ PROGRAMMABLE TIMER CIRCUIT~
~ WRITE-TO-REGISTER COMMAND BUS~
~ READ REGISTER COMMAND BUS
~ DATA BUS~
PARALLEL DATA
LS299
LS191
LS393
74LS08
74LS74
74LS00
1408
1410

Fig. 14G

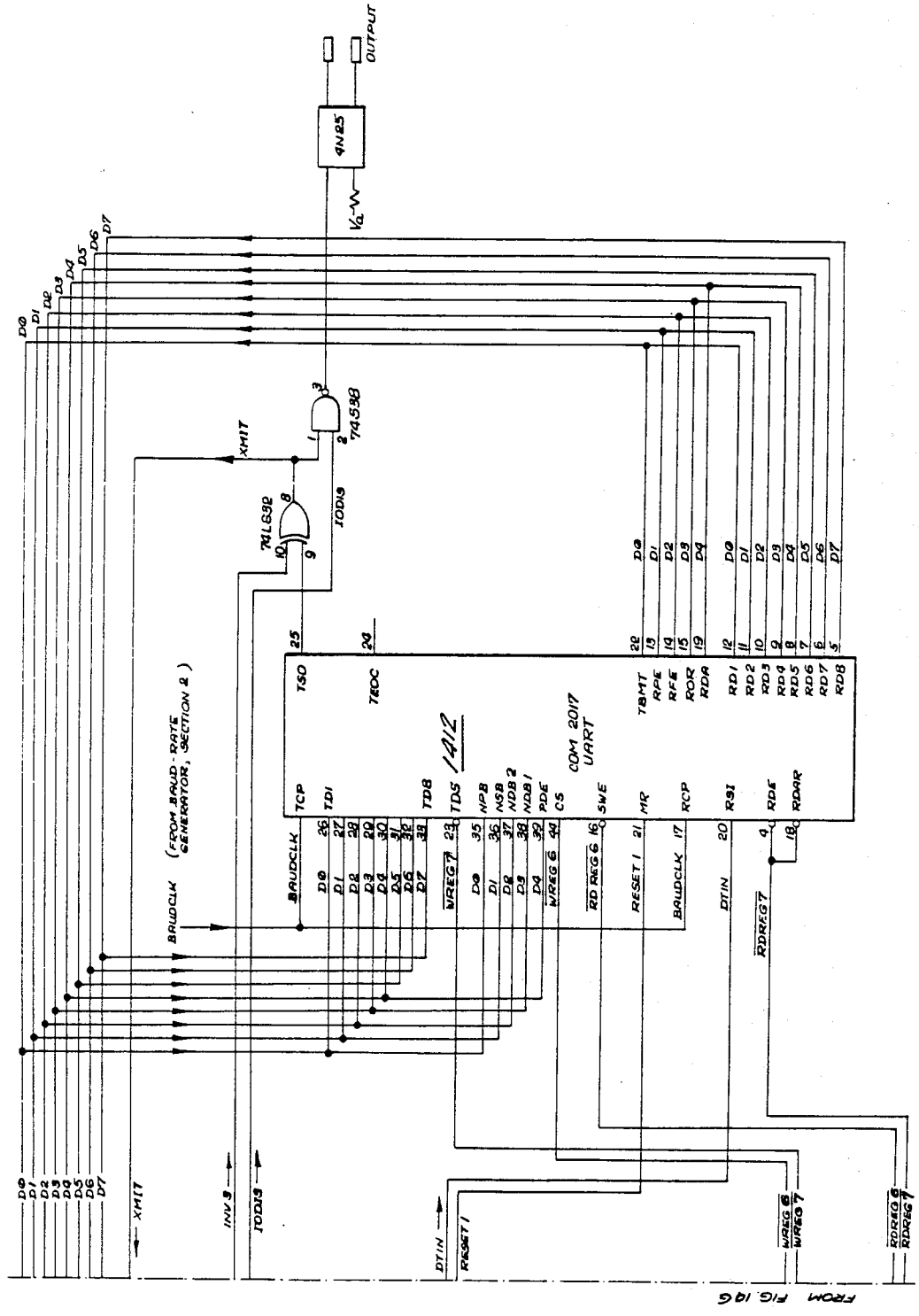
OUTPUT
4N25
74S38
74LS32
XMIT
IODIS
1412
COM 2017
UART
(FROM BAUD-RATE GENERATOR, SECTION 2)
BAUDCLK
INV 3
DTIN
RESET 1
WREG 6
WREG 7
RDREG 6
RDREG 7
FROM FIG. 14G

FIG. 14H

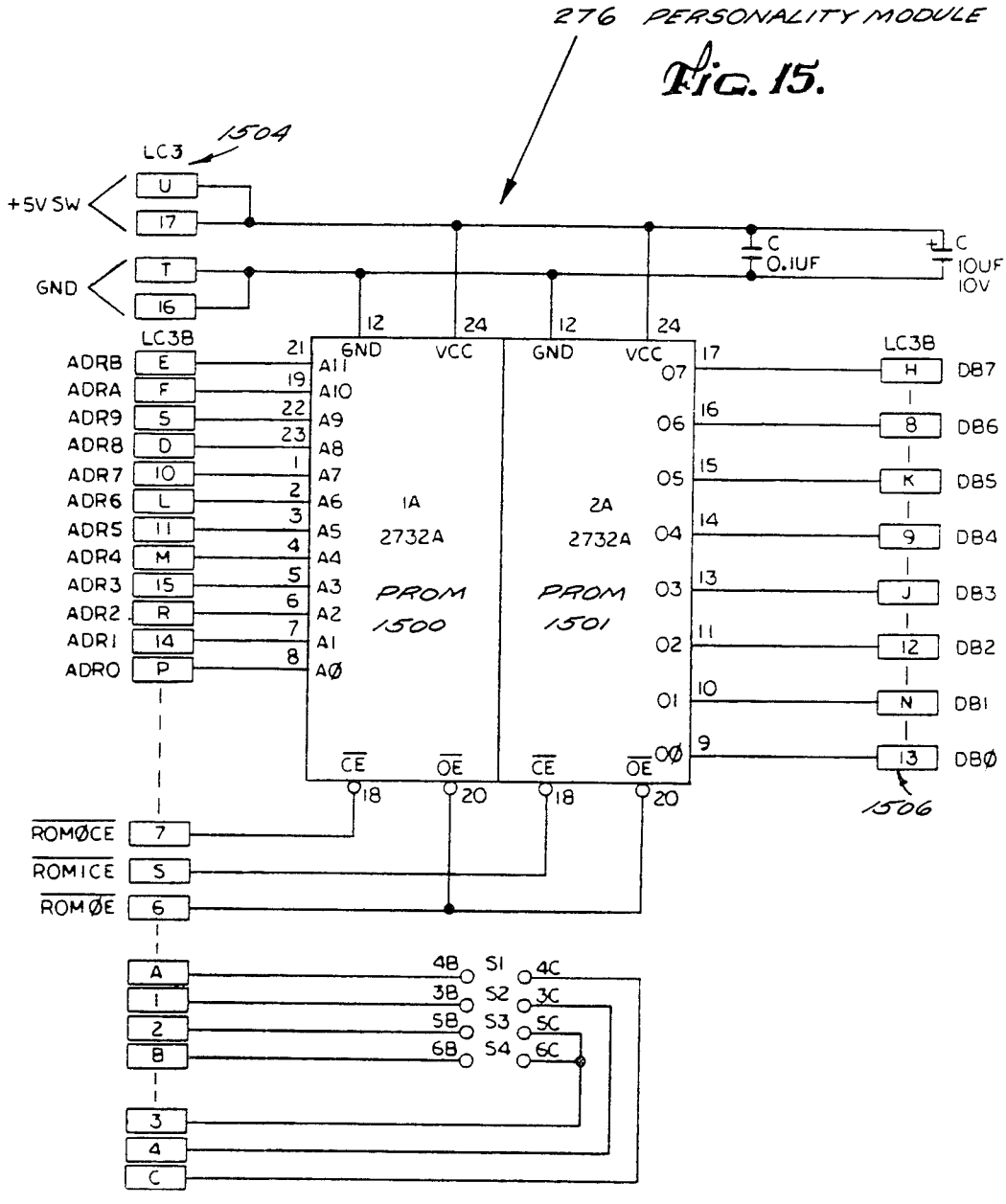
276 PERSONALITY MODULE
1504
LC3
+5V SW
U
17
GND
T
16
C
0.1UF
C
10UF
10V
12
24
12
24
LC3B
ADR8 E
ADRA F
ADR9 5
ADR8 D
ADR7 10
ADR6 L
ADR5 11
ADR4 M
ADR3 15
ADR2 R
ADR1 14
ADR0 P
21 A11
19 A10
22 A9
23 A8
1 A7
2 A6
3 A5
4 A4
5 A3
6 A2
7 A1
8 A0
GND
VCC
GND
VCC
1A
2A
2732A
2732A
PROM
1500
PROM
1501
17 O7
16 O6
15 O5
14 O4
13 O3
11 O2
10 O1
9 O0
LC3B
H DB7
8 DB6
K DB5
9 DB4
J DB3
12 DB2
N DB1
13 DB0
1506
CE
OE
CE
OE
18
20
18
20
ROMØCE 7
ROMICE 5
ROMØE 6
A
1
2
8
3
4
C
48 S1 4C
38 S2 3C
58 S3 5C
68 S4 6C

Fig. 15.

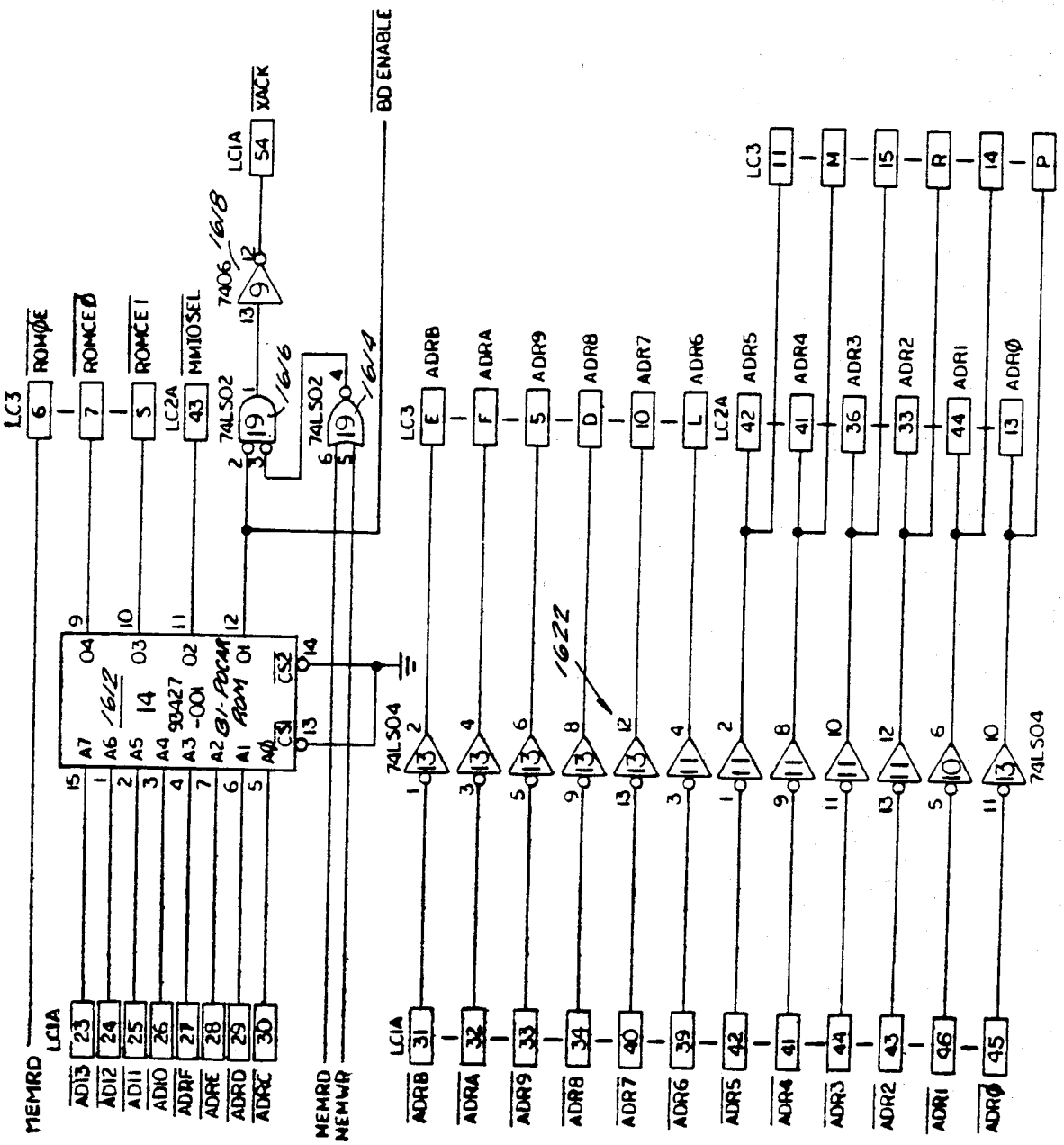
LC3
ROMØE
ROMCEØ
ROMCE1
LC2A
MMIOSEL
74LS02
7406
1618
1616
1614
XACK
BD ENABLE
93427
-001
BI-POCAR
ROM
1612
1622
74LS04
ADR8
ADRA
ADR9
ADR7
ADR6
ADR5
ADR4
ADR3
ADR2
ADR1
ADRØ
MEMRD
MEMWR
ADI3
ADI2
ADI1
ADI0
ADRF
ADRE
ADRD
ADRC

FIG. 16A

FIG. 16B

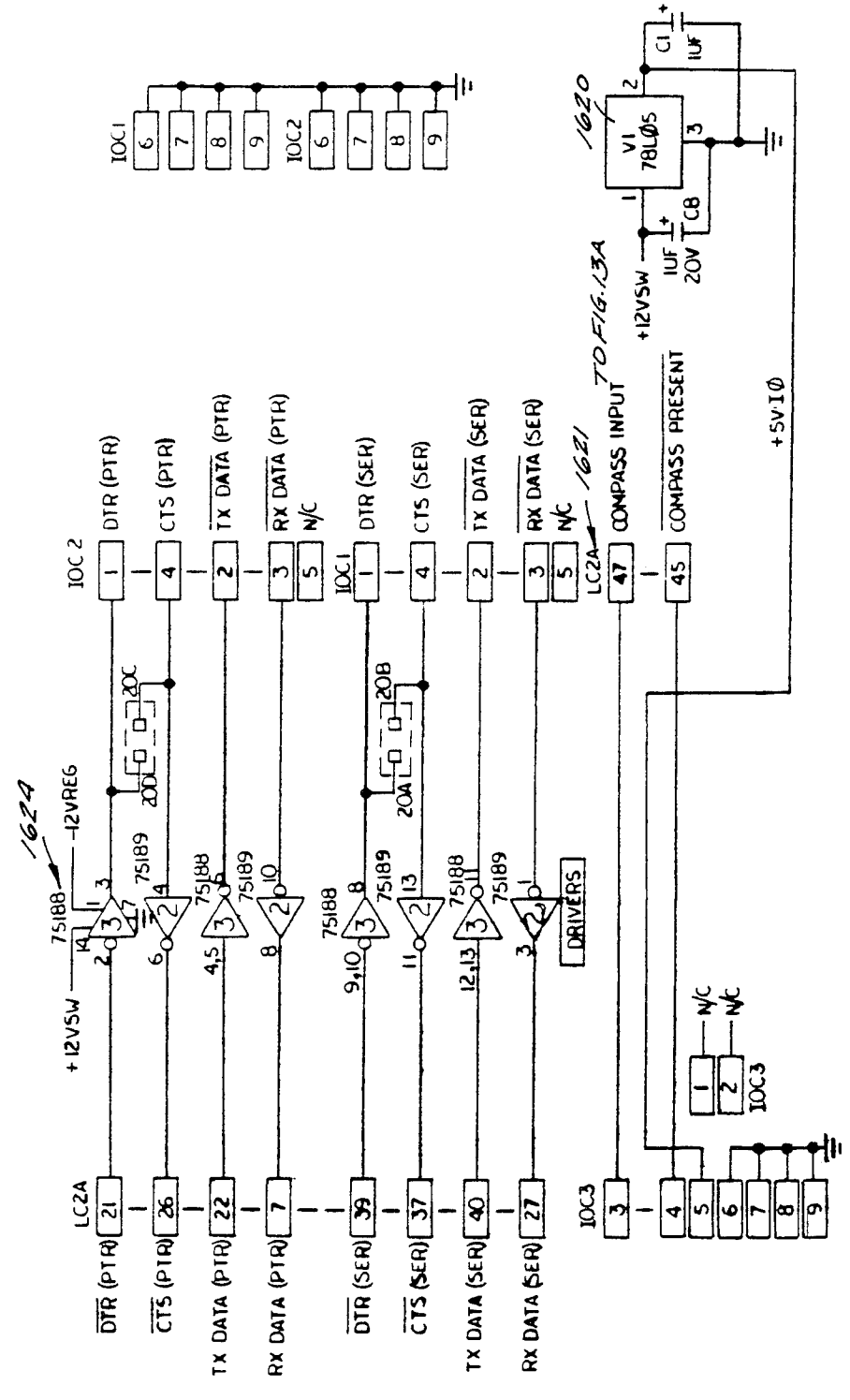
IOC1
IOC2
IOC3
LC2A
DTR (PTR)
CTS (PTR)
TX DATA (PTR)
RX DATA (PTR)
DTR (SER)
CTS (SER)
TX DATA (SER)
RX DATA (SER)
N/C
COMPASS INPUT
COMPASS PRESENT
+5V·IØ
+12VSW
1UF 20V
C8
C1
1UF
V1 78LØ5
1620
1621
1624
TO FIG. 13A
75188
75189
-12VREG
20A
20B
20C
20D
DRIVERS

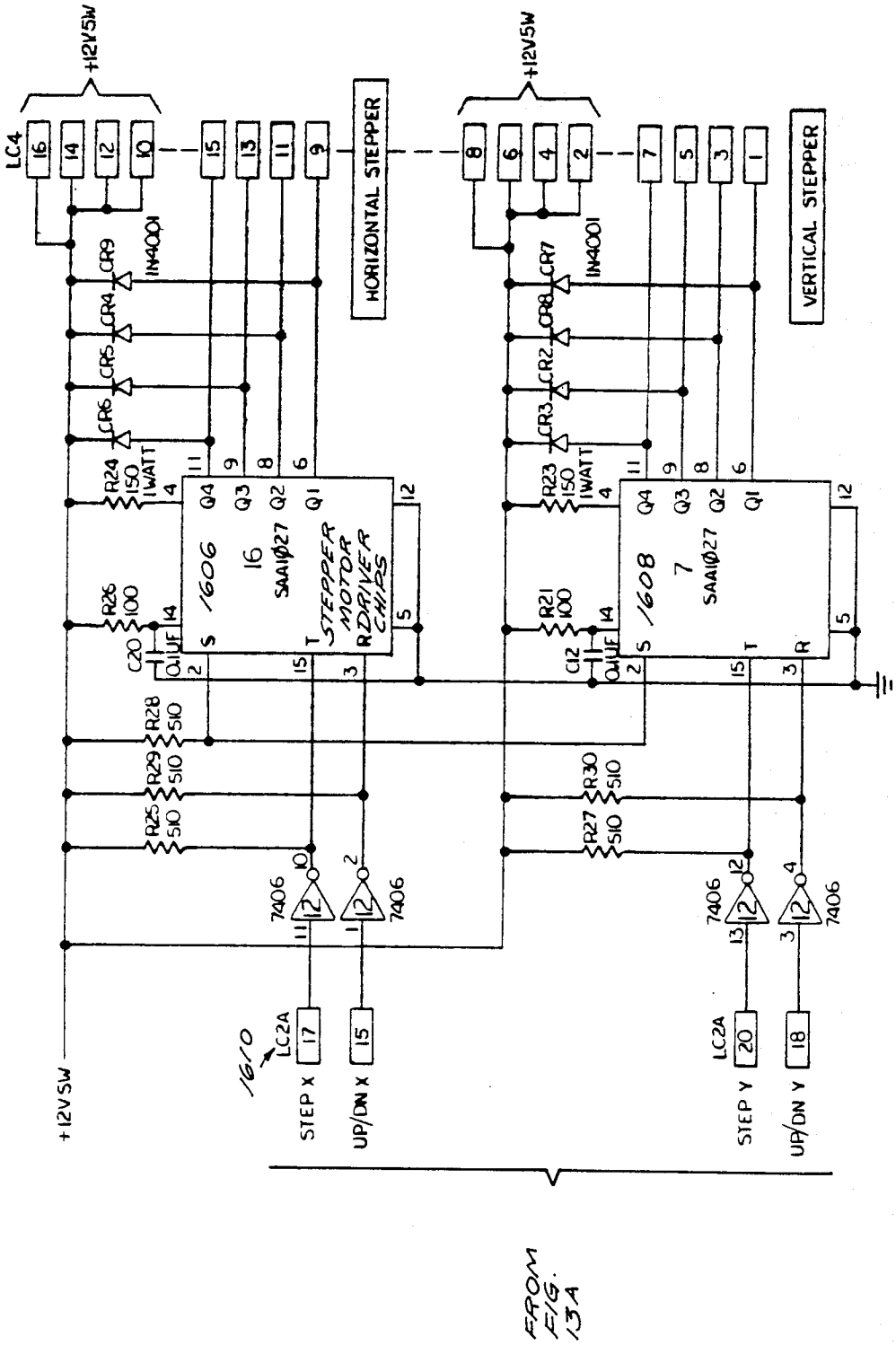
+12V5W
LC4
16
14
12
10
15
13
11
9
HORIZONTAL STEPPER
8
6
4
2
7
5
3
1
VERTICAL STEPPER
IN4001
CR9
CR4
CR5
CR6
CR8
CR2
CR3
CR7
R24 150 1WATT
R26 100
C20 0.1UF
1606
16
SAA1027
STEPPER MOTOR DRIVER CHIPS
1608
7
R23 150 1WATT
R21 100
C12 0.1UF
R28 510
R29 510
R25 510
R30 510
R27 510
7406
1610
LC2A
17
15
20
18
STEP X
UP/DN X
STEP Y
UP/DN Y
+12V SW
FROM FIG. 13A

Fig. 16C

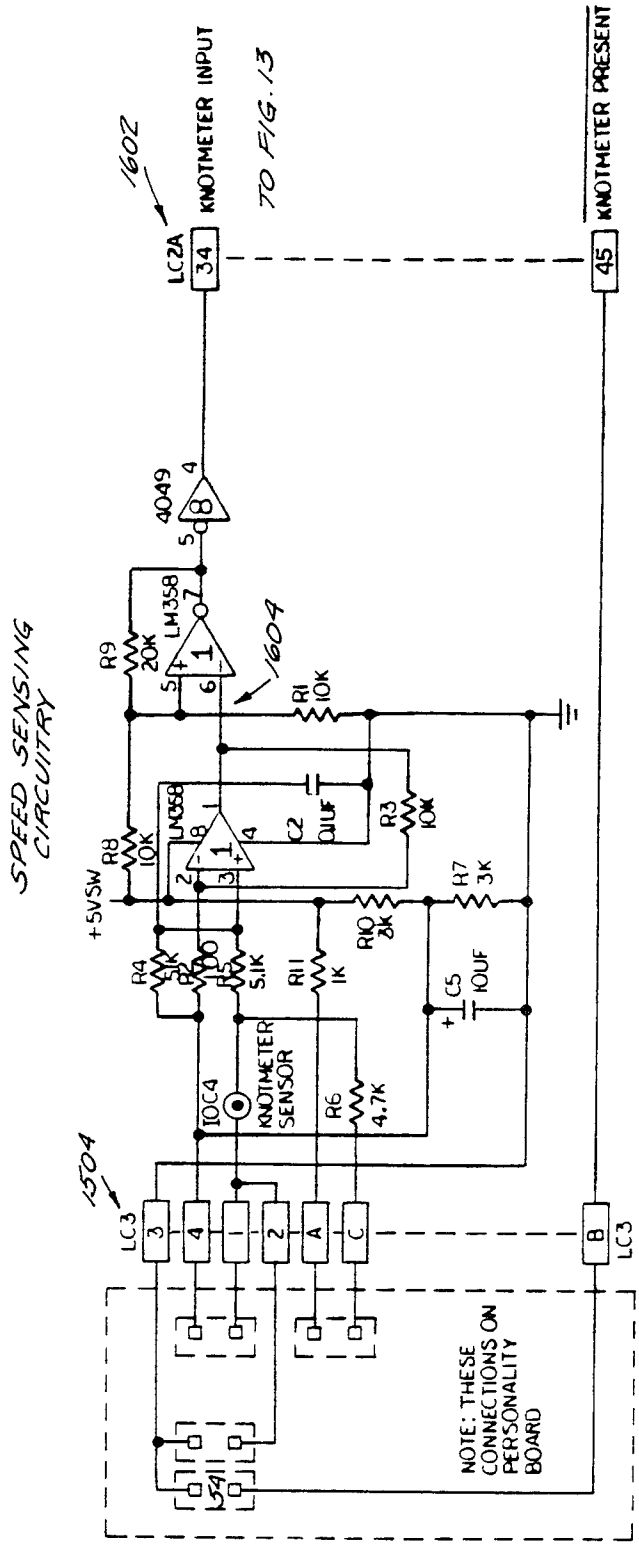
SPEED SENSING CIRCUITRY
1602
KNOTMETER INPUT
TO FIG. 13
LC2A
34
45
KNOTMETER PRESENT
4049
LM358
1604
R9 20K
R1 10K
R8 10K
R3 10K
C2 .01UF
R7 3K
R10 2K
+5VSW
R4 5.1K
R5 500
R8 5.1K
R11 1K
C5 10UF
IDC4
KNOTMETER SENSOR
R6 4.7K
1504
LC3
NOTE: THESE CONNECTIONS ON PERSONALITY BOARD

Fig. 16D

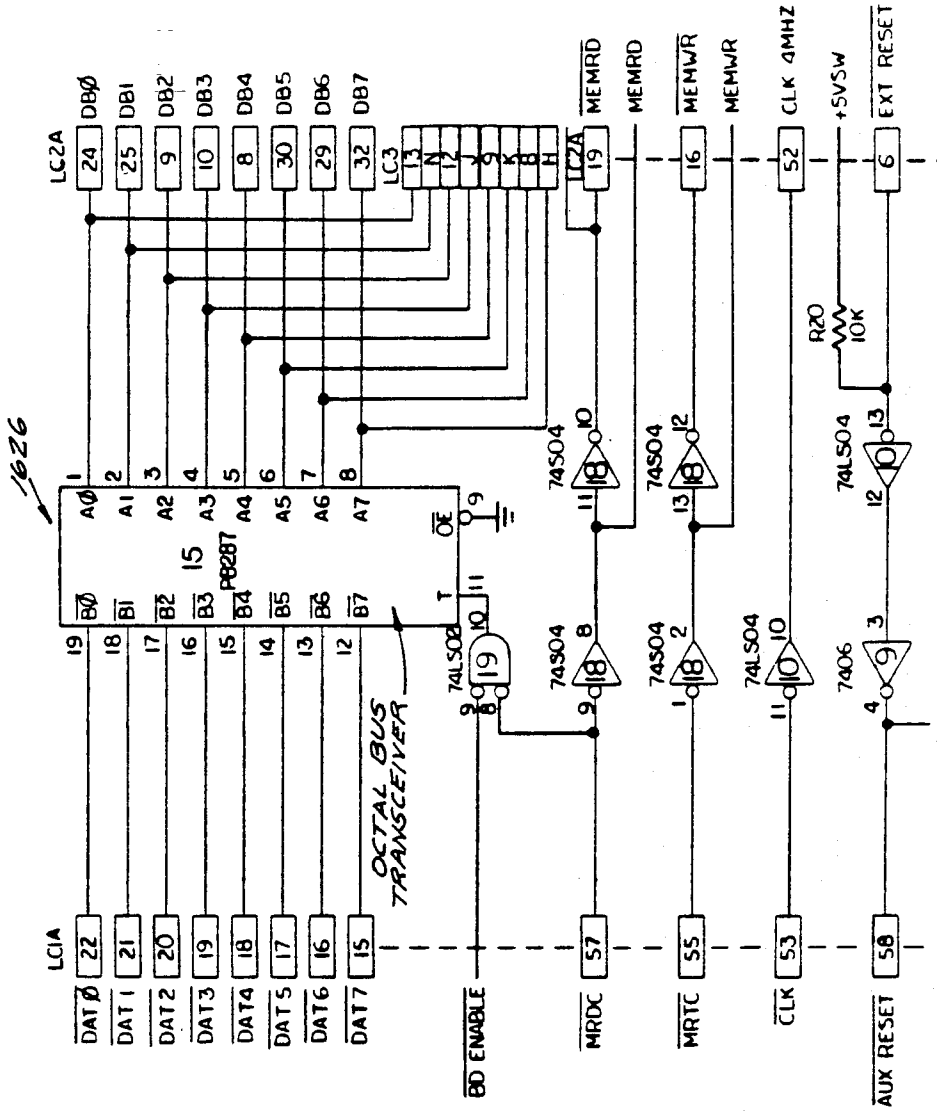

FIG. 16E

FROM FIG. 18C

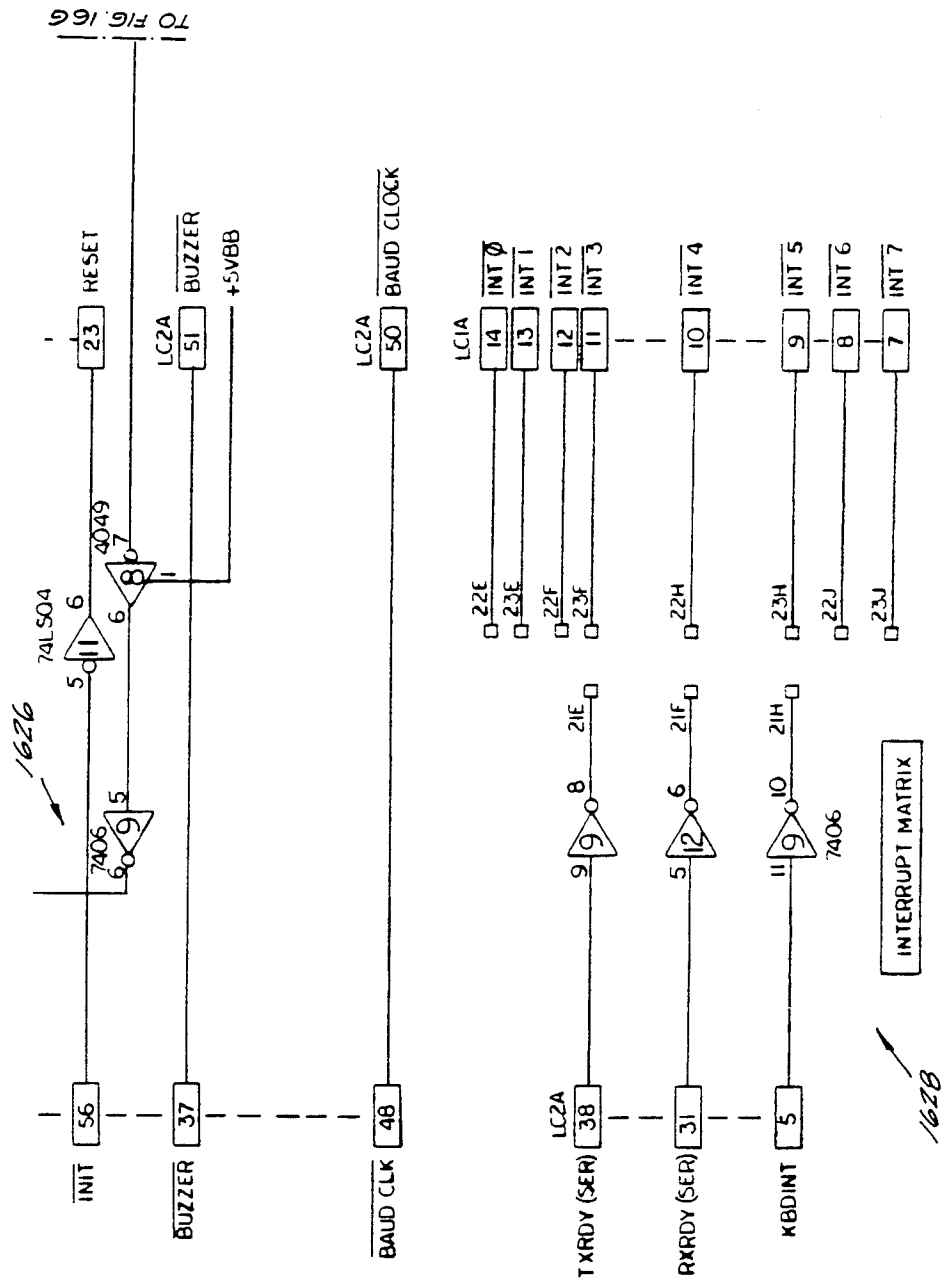
TO FIG. 16G
RESET
23
LC2A
BUZZER
51
+5VBB
LC2A
BAUD CLOCK
50
4049
74LS04
7406
1626
INIT
56
BUZZER
37
BAUD CLK
48
LC1A
INT Ø
INT 1
INT 2
INT 3
INT 4
INT 5
INT 6
INT 7
14
13
12
11
10
9
8
7
22E
23E
22F
23F
22H
23H
22J
23J
LC2A
TXRDY (SER)
38
RXRDY (SER)
31
KBDINT
5
21E
21F
21H
7406
INTERRUPT MATRIX
1628

FIG. 16F

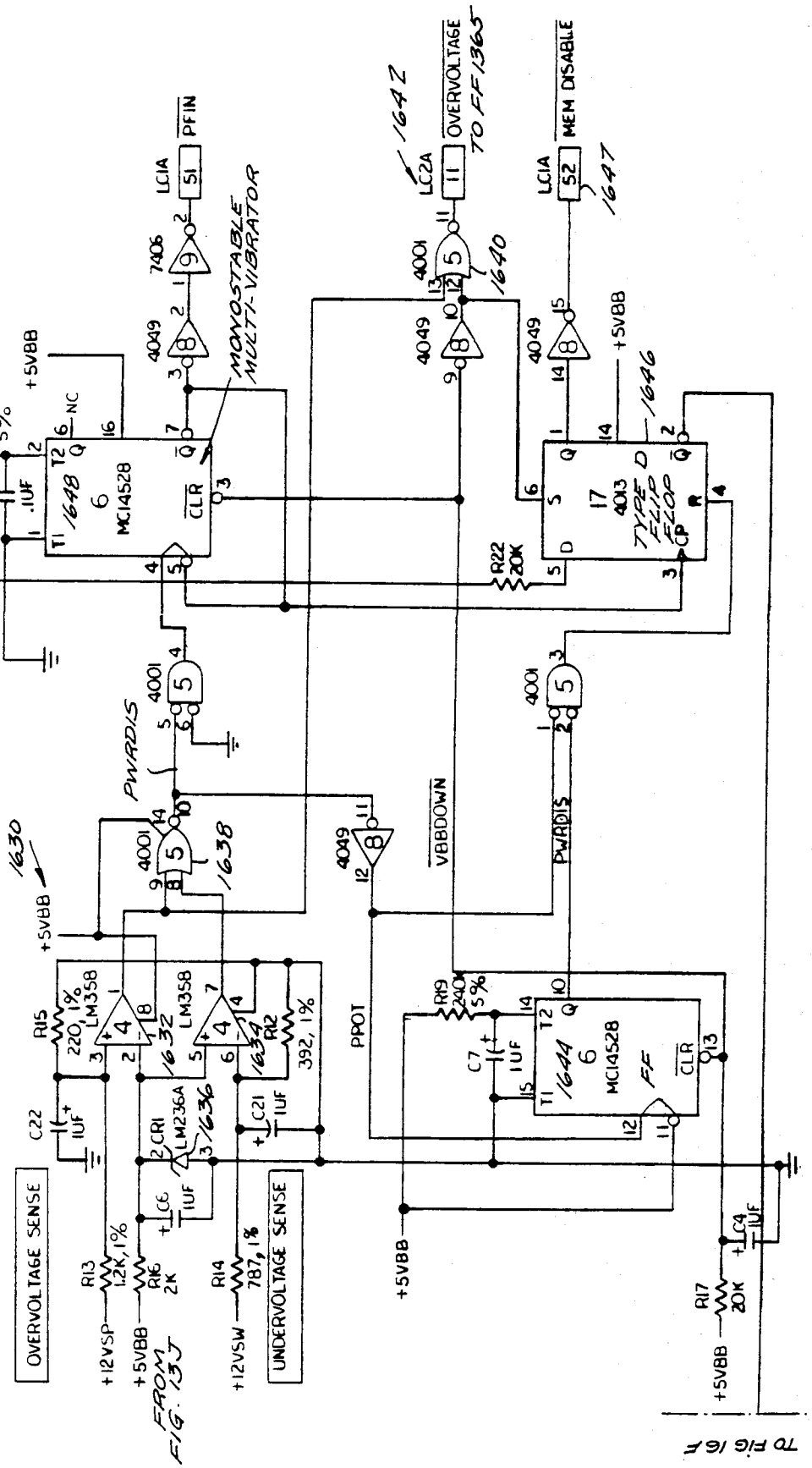
OVERVOLTAGE SENSE
UNDERVOLTAGE SENSE
+12VSP
+5VBB
FROM FIG. 13J
+12VSW
R13 1.2K, 1%
R16 2K
R14 787, 1%
C22 1UF
C6 1UF
C21 1UF
CR1 LM236A
R15 220, 1%
R12 392, 1%
LM358
1632
1634
1636
1638
1630
PWRDIS
PPOT
VBBDOWN
R19 240K 5%
C7 1UF
1644
MC14528
FF
C4 1UF
R17 20K
TO FIG 16F
R18 150K 5%
C3 .1UF
1648
MC14528
CLR
NC
7406
4049
4001
LC1A
51
PFIN
MONOSTABLE MULTI-VIBRATOR
LC2A
11
OVERVOLTAGE TO FF1365
1642
1640
52
MEM DISABLE
1647
1646
4013
TYPE D FLIP FLOP
R22 20K

FIG. 16C

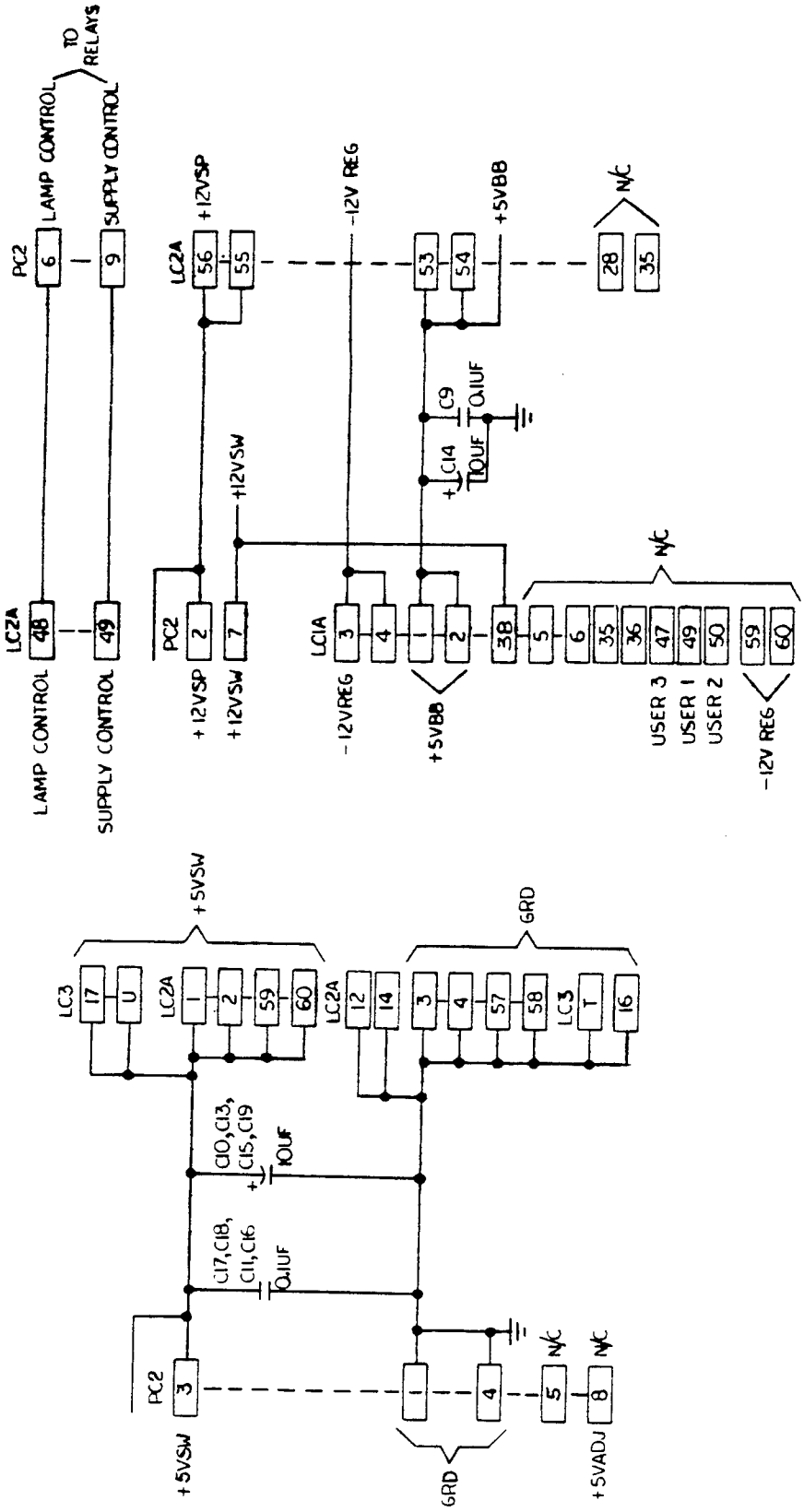
PC2
6
LAMP CONTROL
9
SUPPLY CONTROL
TO RELAYS
LC2A
56
+12VSP
55
-12V REG
53
54
+5VBB
28
35
N/C
C9
.01UF
C14
10UF
+12VSW
LC2A
48
49
LAMP CONTROL
SUPPLY CONTROL
PC2
2
7
+12VSP
+12VSW
LC1A
3
4
1
2
38
5
6
35
36
47
49
50
59
60
-12VREG
+5VBB
USER 3
USER 1
USER 2
-12V REG
+5VSW
GRD
LC3
17
U
LC2A
1
2
59
60
LC2A
12
14
3
4
57
58
LC3
T
16
C10,C13,
C15,C19
10UF
C17,C18,
C11,C16
.01UF
PC2
3
1
4
5
8
N/C
N/C
+5VSW
GRD
+5VADJ

FIG. 16H

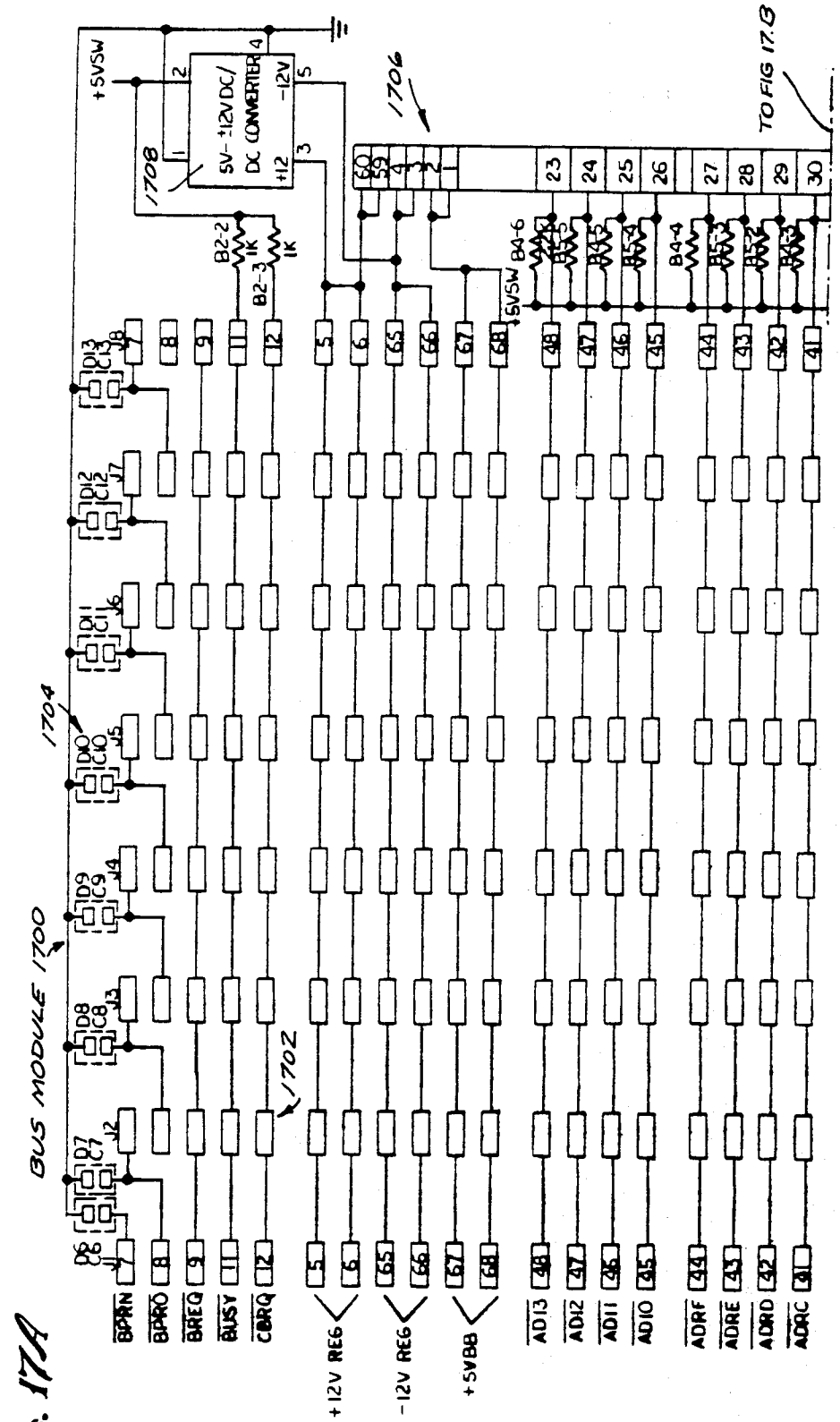
BUS MODULE 1700
1704
1702
1706
1708
TO FIG 17.8
+5VSW
5V-±12V DC/
DC CONVERTER
+12
-12V
B2-2 1K
B2-3 1K
B4-6
B4-4
BPRN
BPRO
BREQ
BUSY
CBRQ
+12V REG
-12V REG
+5VBB
AD13
AD12
AD11
AD10
ADRF
ADRE
ADRD
ADRC

Fig. 17A

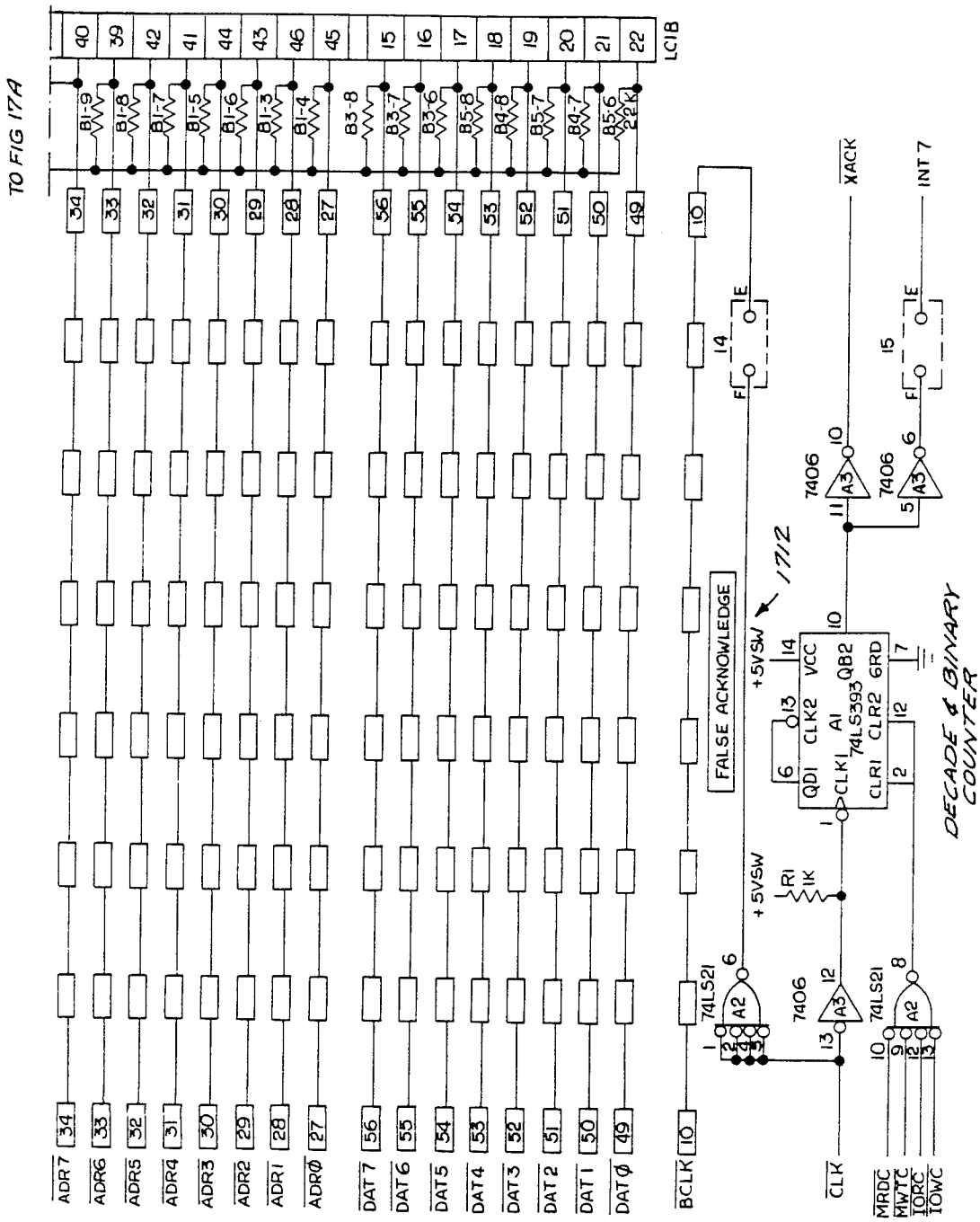
TO FIG 17A
LC18
ADR7
ADR6
ADR5
ADR4
ADR3
ADR2
ADR1
ADRØ
DAT7
DAT6
DAT5
DAT4
DAT3
DAT2
DAT1
DATØ
BCLK
CLK
MRDC
MWTC
IORC
IOWC
XACK
INT 7
FALSE ACKNOWLEDGE
+5VSW
1712
74LS21
7406
74LS393
DECADE & BINARY COUNTER

Fig. 17B

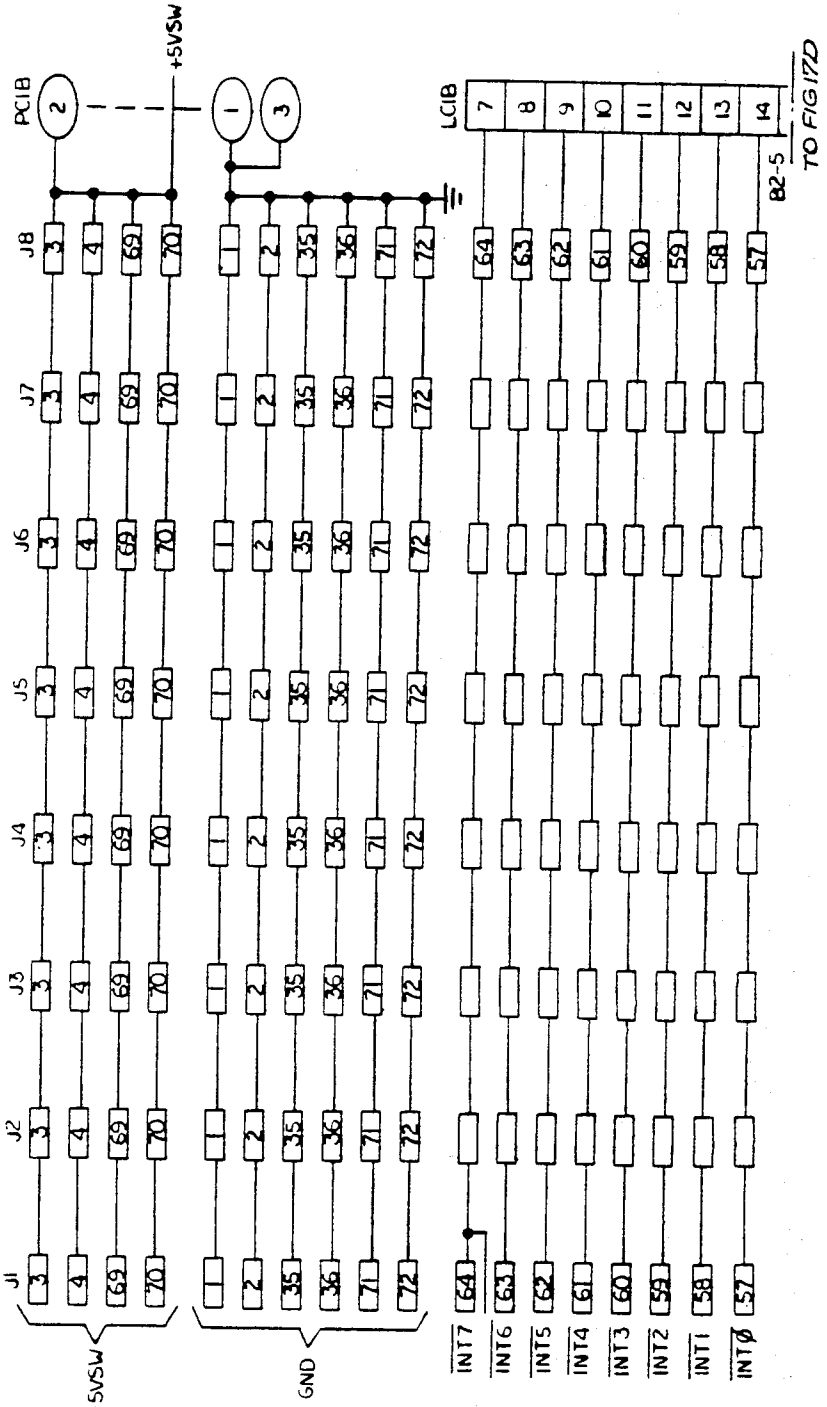
PCIB
+5VSW
J8
J7
J6
J5
J4
J3
J2
J1
LCIB
TO FIG 17D
B2-5
+5VSW
GND
INT7
INT6
INT5
INT4
INT3
INT2
INT1
INTØ

Fig. 17C

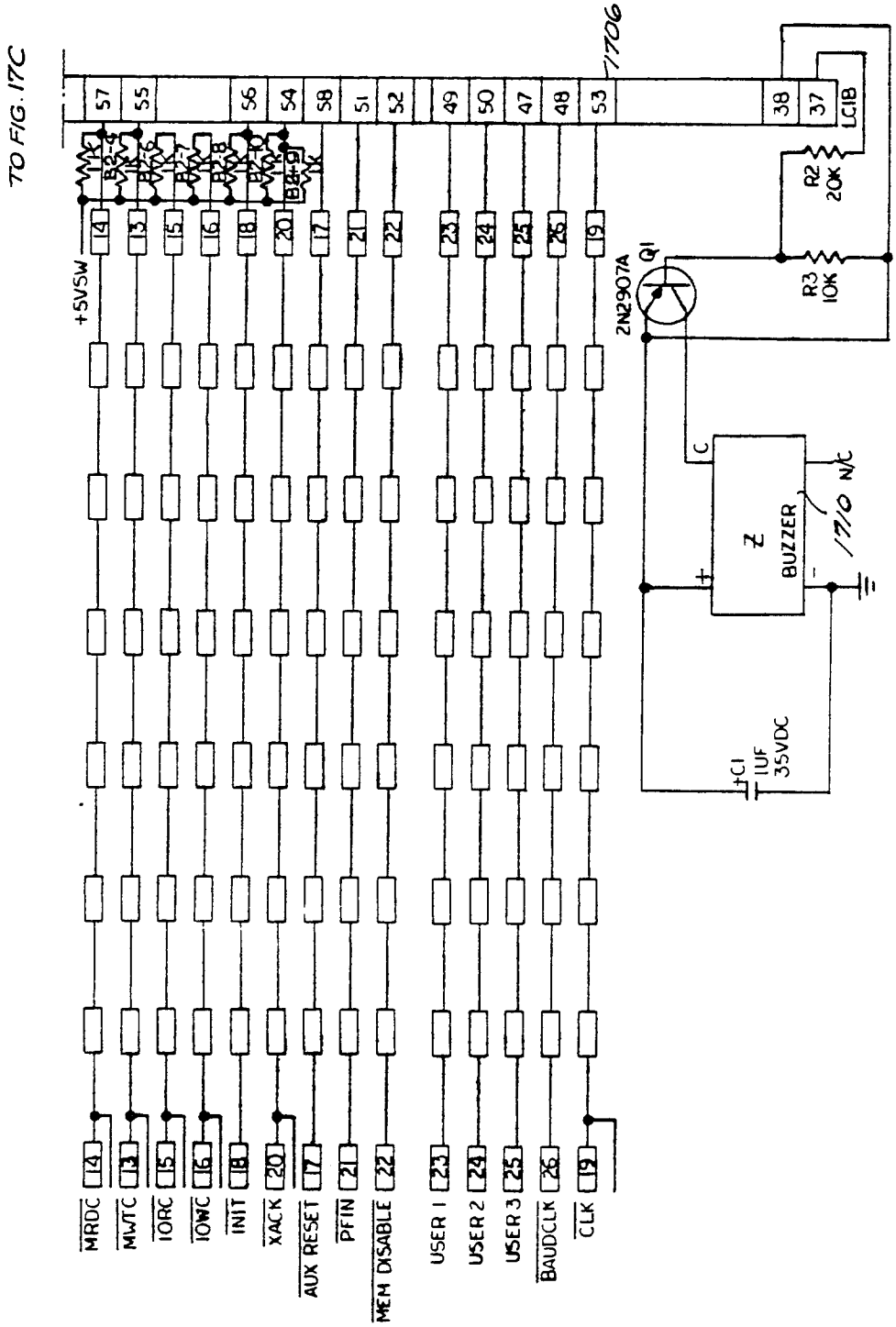
TO FIG. 17C
1706
57
55
56
54
58
51
52
49
50
47
48
53
38
37
LC1B
R2
20K
R3
10K
Q1
2N2907A
+5VSW
14
13
15
16
18
20
17
21
22
23
24
25
26
19
C
Z
BUZZER
1710
N/C
+C1
1UF
35VDC
MRDC
MWTC
IORC
IOWC
INIT
XACK
AUX RESET
PFIN
MEM DISABLE
USER 1
USER 2
USER 3
BAUDCLK
CLK

FIG. 17D

FIG. 18A

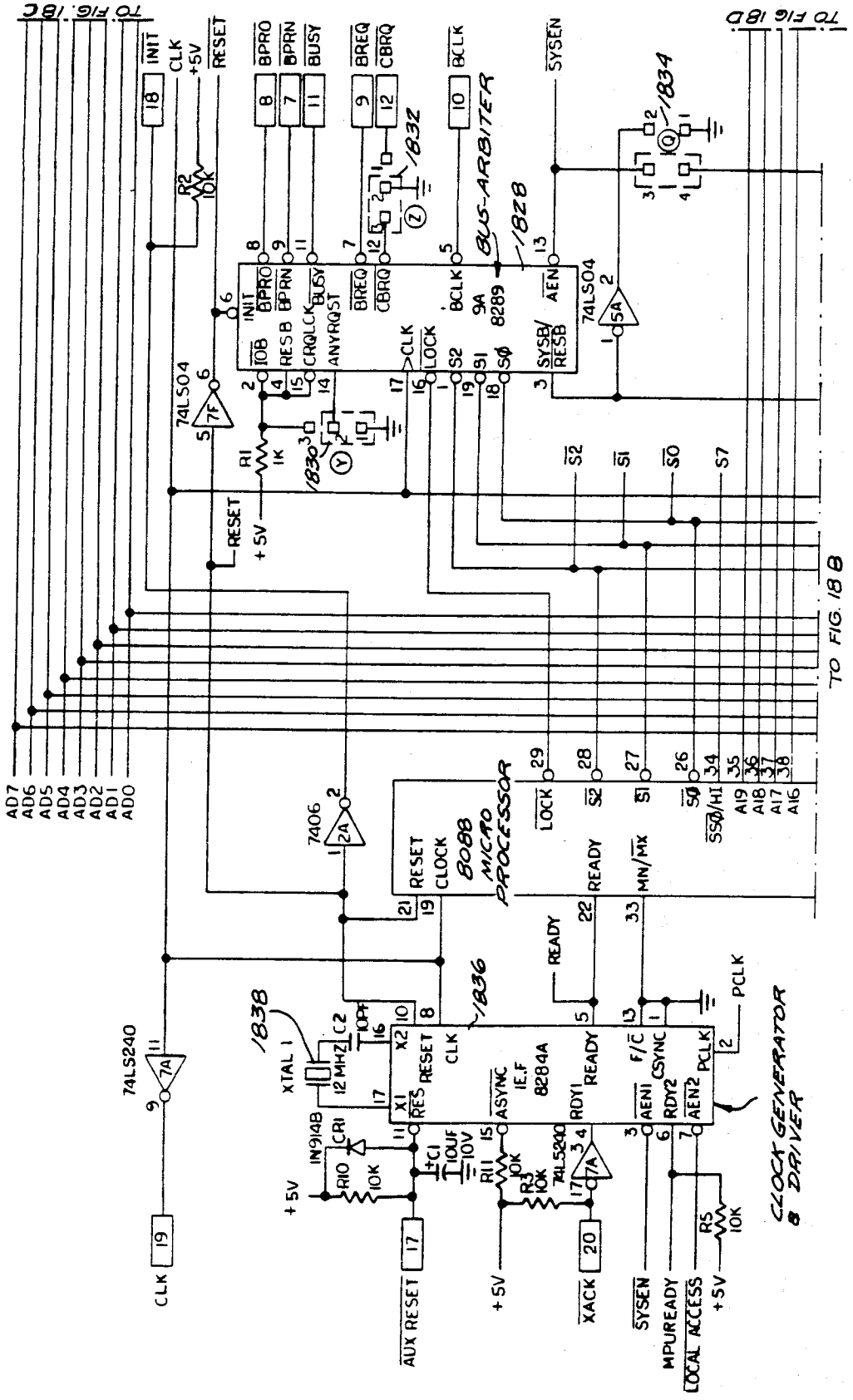
TO FIG. 18C
TO FIG. 18D
TO FIG. 18B
BUS-ARBITER
8289
8088 MICRO PROCESSOR
8284A
CLOCK GENERATOR & DRIVER
74LS04
74LS240
7406
XTAL 1
12 MHZ
IN914B
AD7
AD6
AD5
AD4
AD3
AD2
AD1
AD0
CLK
AUX RESET
XACK
SYSEN
MPUREADY
LOCAL ACCESS
PCLK
+5V
RESET
INIT
BPRO
BPRN
BUSY
BREQ
CBRQ
BCLK
SYSEN
1828
1830
1832
1834
1836
1838

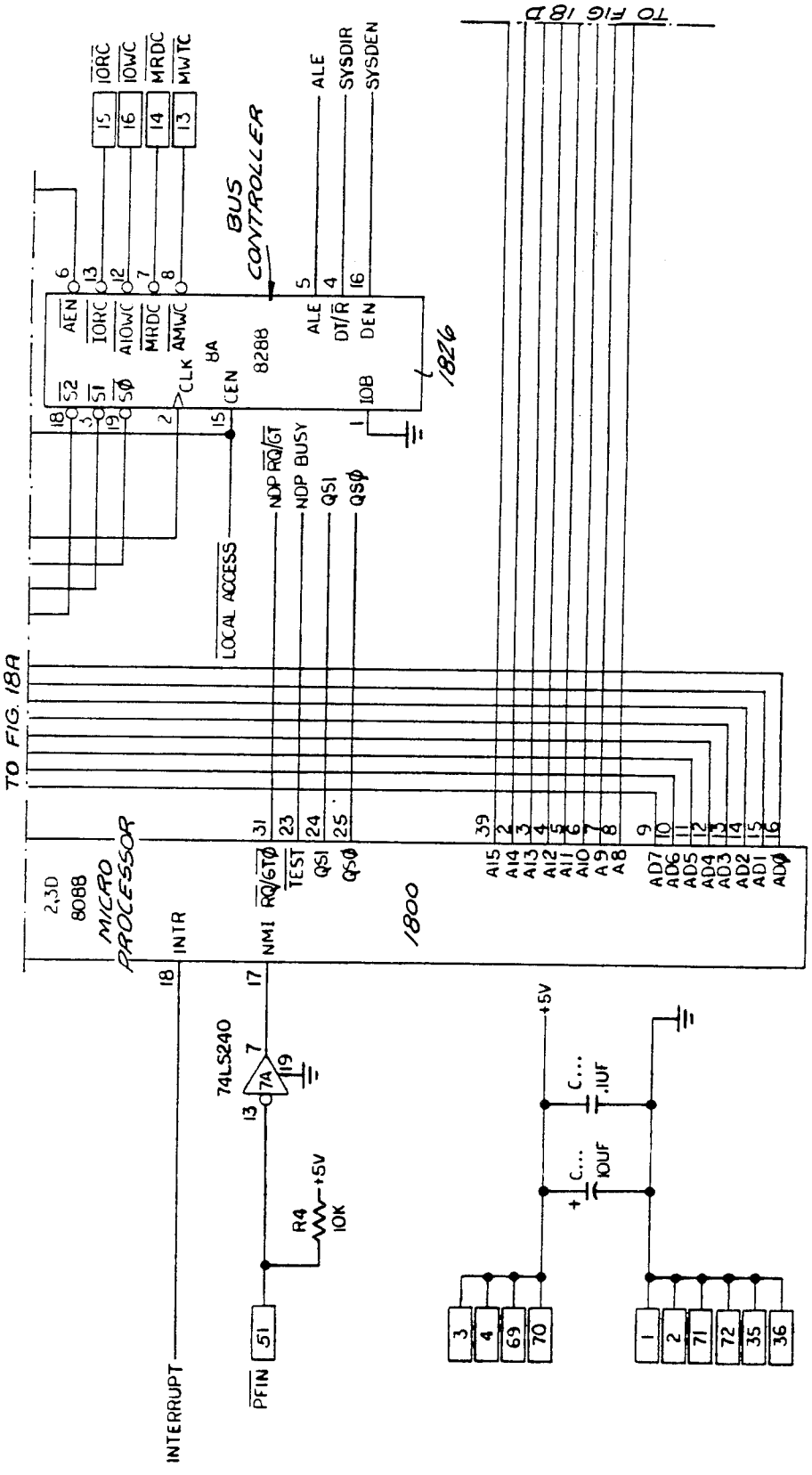
TO FIG. 18B
TO FIG. 18A
2,3D
8088
MICRO
PROCESSOR
1800
INTR
NMI
RQ/GT0
TEST
QS1
QS0
INTERRUPT
74LS240
R4
10K
+5V
PFIN
BUS
CONTROLLER
8288
1826
AEN
IORC
AIOWC
MRDC
AMWC
CLK
CEN
IOB
ALE
DT/R
DEN
IORC
IOWC
MRDC
MWTC
SYSDIR
SYSDEN
LOCAL ACCESS
NDP RQ/GT
NDP BUSY
QS1
QS0
A15
A14
A13
A12
A11
A10
A9
A8
AD7
AD6
AD5
AD4
AD3
AD2
AD1
AD0
.1UF
10UF

FIG. 18B

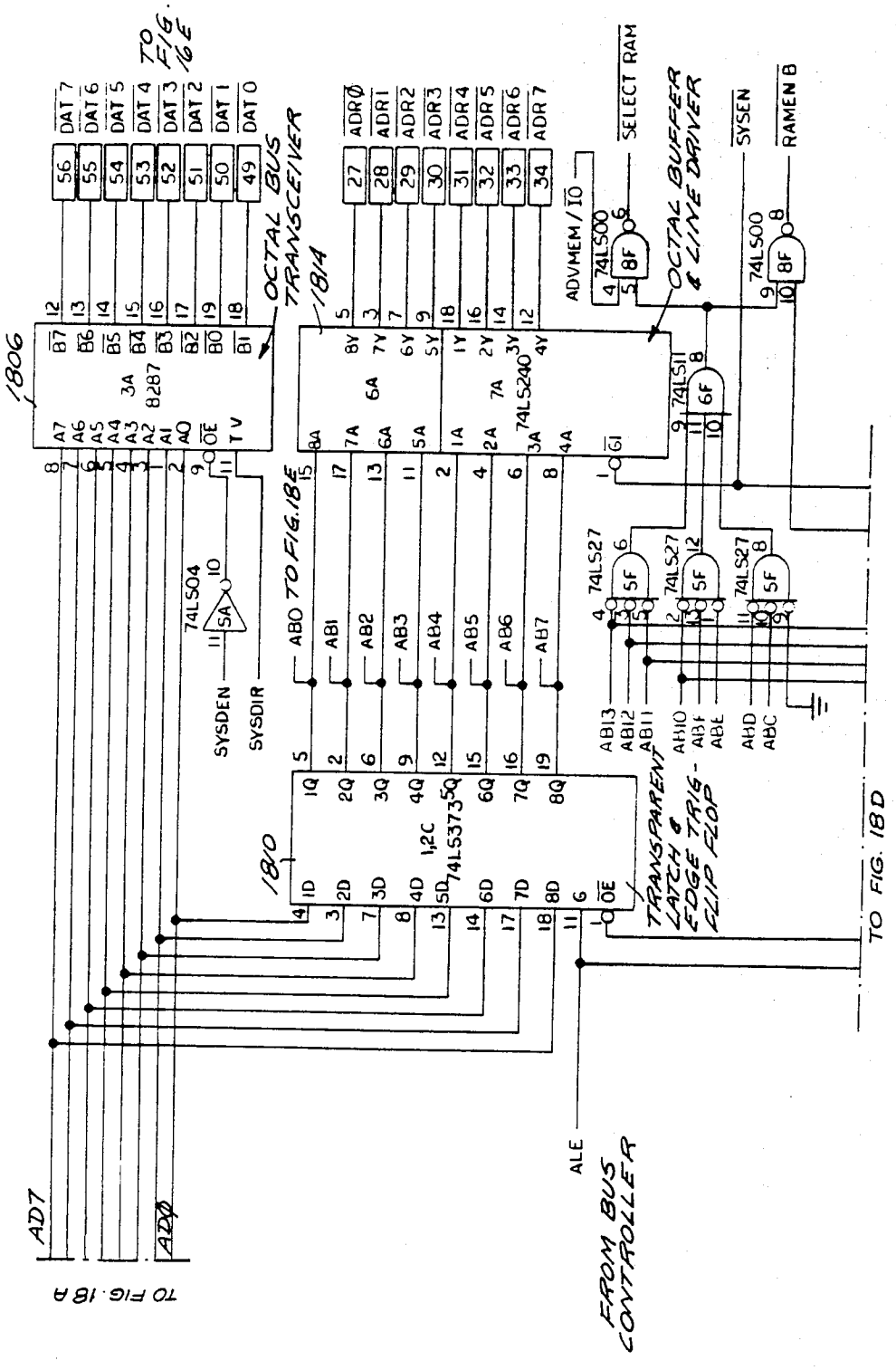
TO FIG. 16E
DAT 7
DAT 6
DAT 5
DAT 4
DAT 3
DAT 2
DAT 1
DAT 0
ADR Ø
ADR1
ADR2
ADR3
ADR4
ADR5
ADR6
ADR 7
1806
8287
OCTAL BUS TRANSCEIVER
1814
74LS240
ADVMEM / IO
74LS00
SELECT RAM
OCTAL BUFFER & LINE DRIVER
74LS11
SYSEN
RAMEN B
74LS04
SYSDEN
SYSDIR
TO FIG. 18E
AB0
AB1
AB2
AB3
AB4
AB5
AB6
AB7
1810
74LS373
TRANSPARENT LATCH & EDGE TRIG. FLIP FLOP
74LS27
AB13
AB12
AB11
AB10
AB9
AB8
AB7
AB6
AB5
AB4
AB3
AB2
AB1
AB0
ALE
FROM BUS CONTROLLER
TO FIG. 18D
AD7
AD0
TO FIG. 18A

FIG. 18C

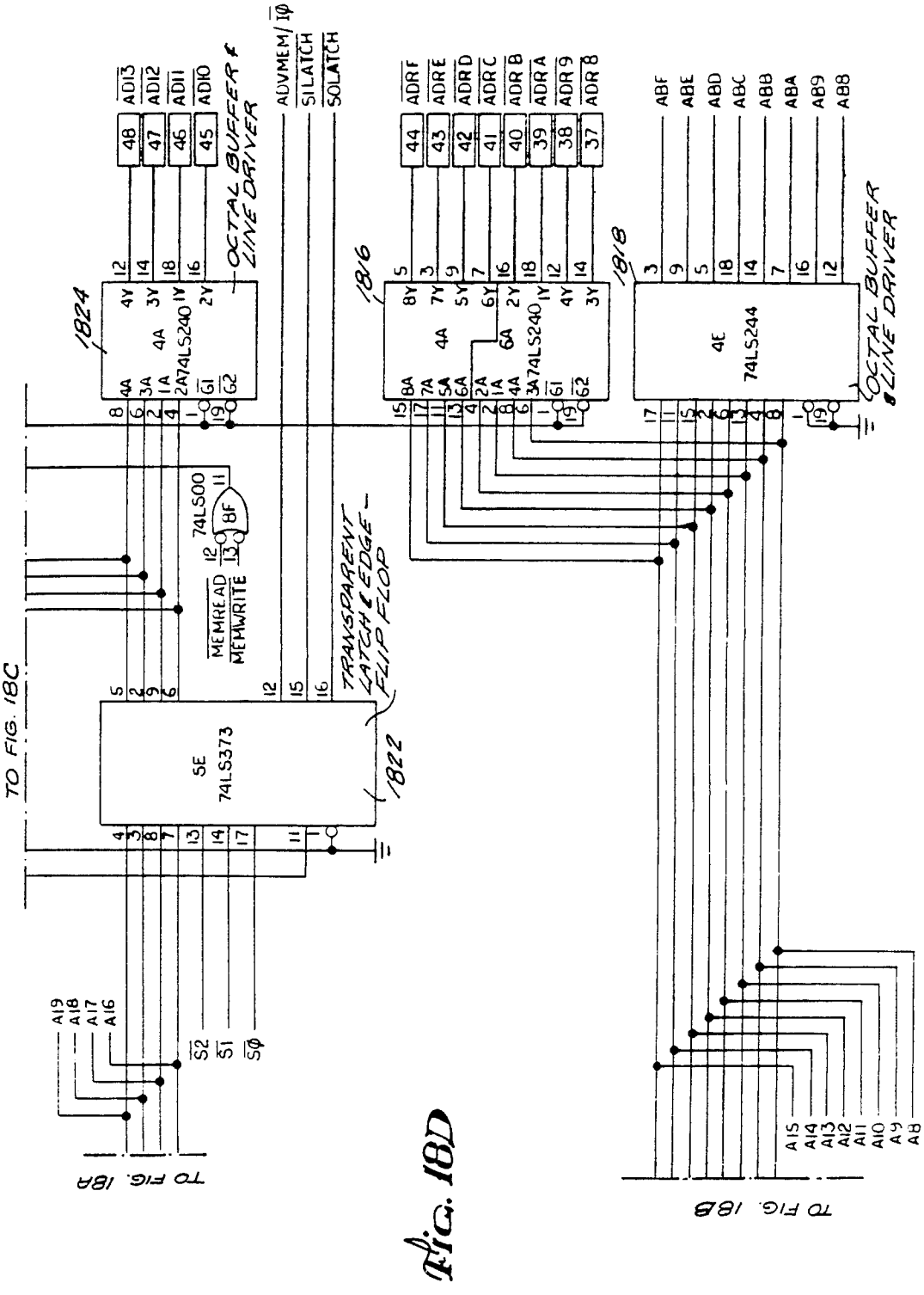
TO FIG. 18C
1824
74LS240
OCTAL BUFFER & LINE DRIVER
ADI3
ADI2
ADI1
ADI0
ADVMEM/1φ
SILATCH
SOLATCH
1816
74LS240
ADRF
ADRE
ADRD
ADRC
ADRB
ADRA
ADR9
ADR8
1818
74LS244
OCTAL BUFFER & LINE DRIVER
ABF
ABE
ABD
ABC
ABB
ABA
AB9
AB8
74LS00
MEMREAD
MEMWRITE
1822
74LS373
TRANSPARENT LATCH/EDGE-FLIP FLOP
A19
A18
A17
A16
S2
S1
Sφ
TO FIG. 18A
A15
A14
A13
A12
A11
A10
A9
A8
TO FIG. 18B

FIG. 18D

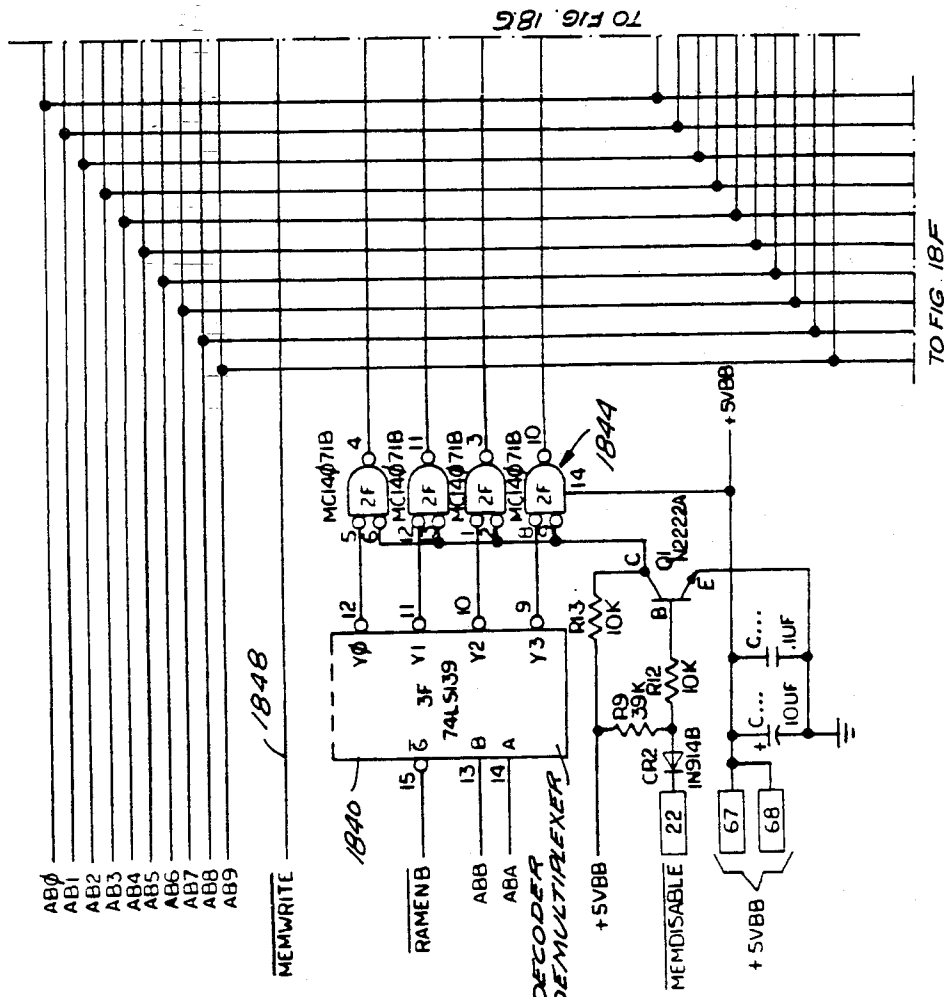

FROM FIG. 18C

FIG. 18E

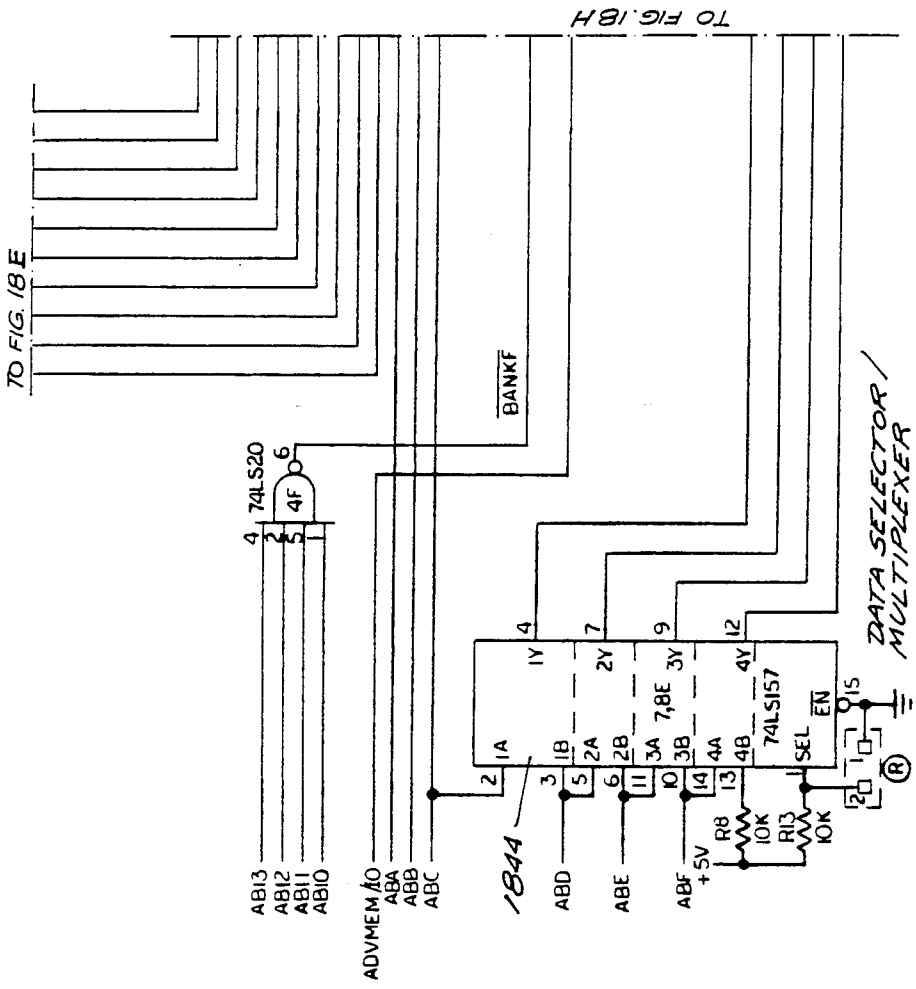
TO FIG. 18H
TO FIG. 18E
BANKF
74LS20
4F
ABI3
ABI2
ABI1
ABI0
ADVMEM/IO
ABA
ABB
ABC
1844
ABD
ABE
ABF
+5V
R8
10K
R13
10K
74LS157
7,8E
SEL
EN
1Y
2Y
3Y
4Y
DATA SELECTOR/
MULTIPLEXER

Fig. 18F

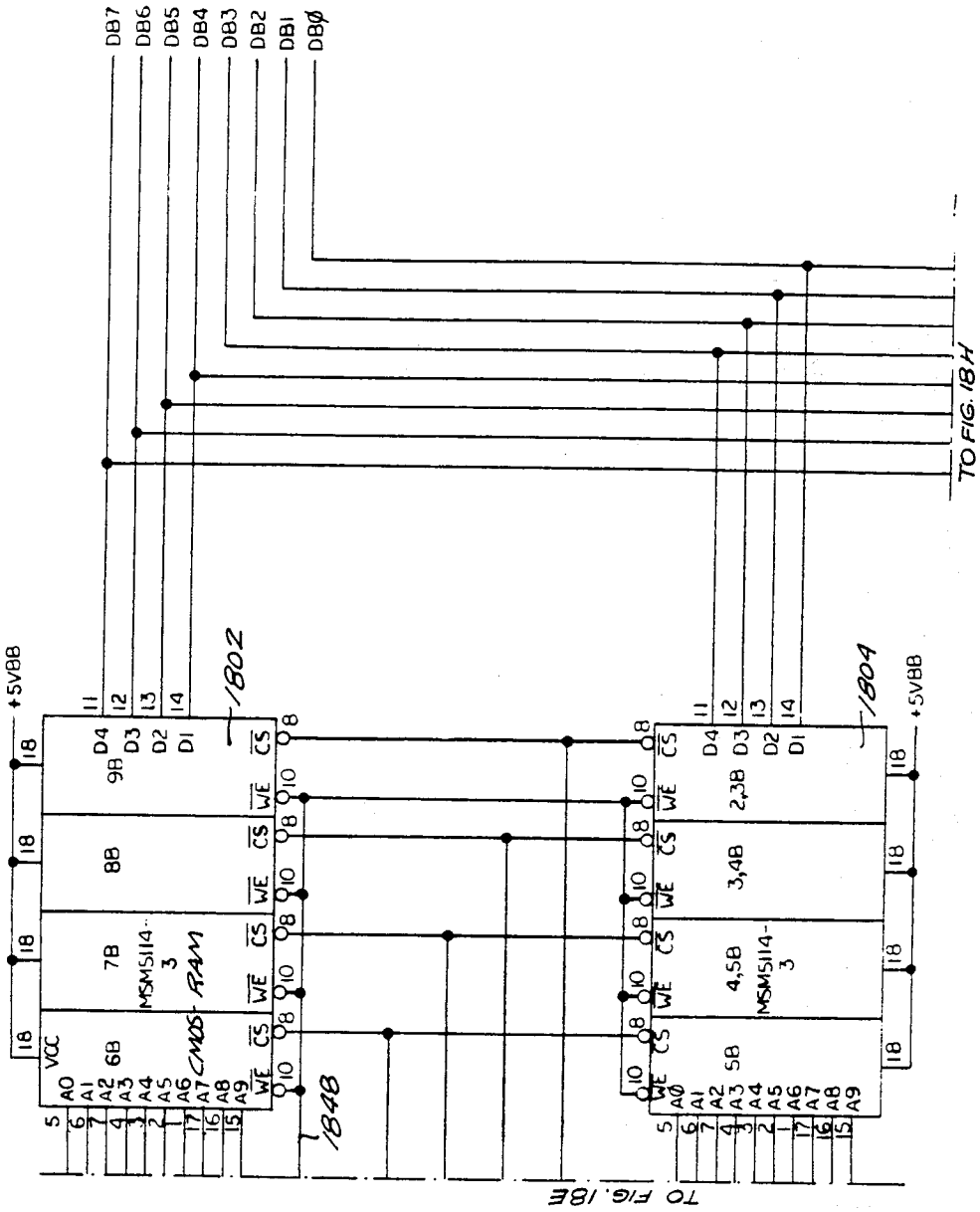
DB7
DB6
DB5
DB4
DB3
DB2
DB1
DBØ
TO FIG. 18H
+5VBB
1802
1804
1848
TO FIG. 18E
MSM5114-3
CMOS RAM
VCC
D4
D3
D2
D1
CS
WE
A0
A1
A2
A3
A4
A5
A6
A7
A8
A9

Fig. 18G

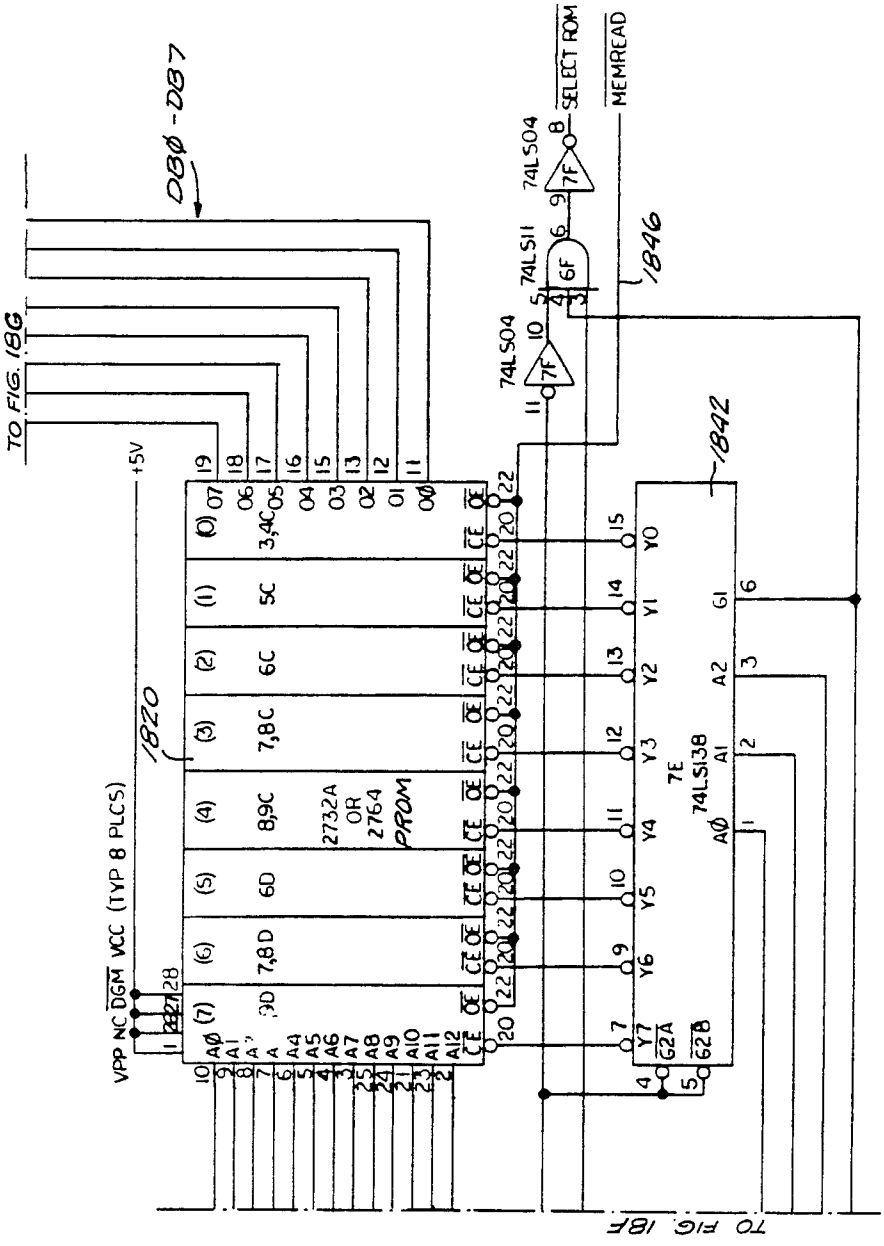
TO FIG. 18G
D0Ø - D07
+5V
VPP NC DGM VCC (TYP 8 PLCS)
1820
2732A OR 2764 PROM
7,8D
6D
8,9C
7,8C
6C
5C
3,4C
74LS04
74LS11
74LS04
SELECT ROM
MEMREAD
1846
1842
74LS138
7E
TO FIG 18F

FIG. 18H

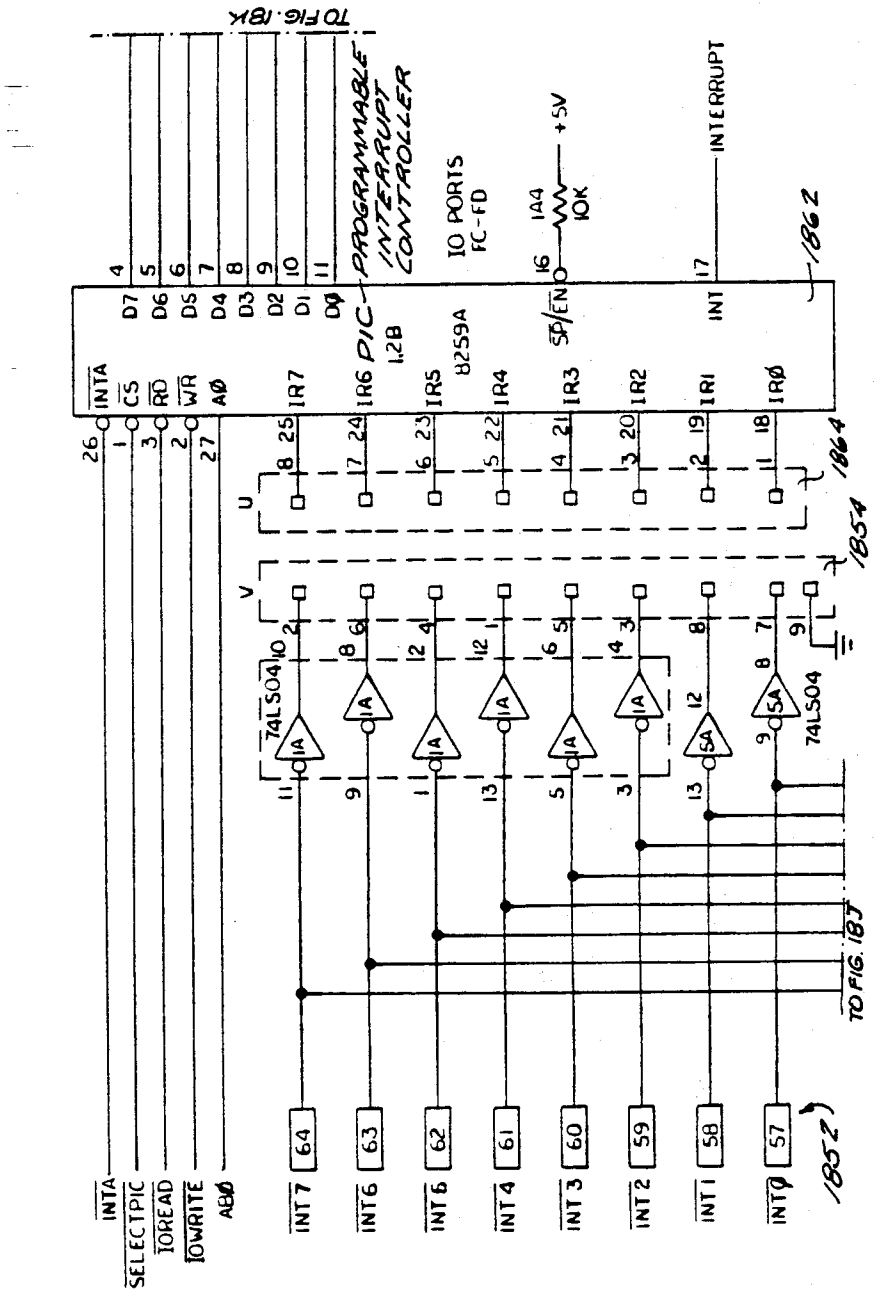
TO FIG. 18K
PROGRAMMABLE INTERRUPT CONTROLLER
PIC 1.2B
8259A
IO PORTS FC-FD
+5V
10K
INTERRUPT
1862
1864
1854
1852
74LS04
TO FIG. 18J
INTA
SELECTPIC
IOREAD
IOWRITE
ABØ
INT7
INT6
INT5
INT4
INT3
INT2
INT1
INTØ

FIG. 18I

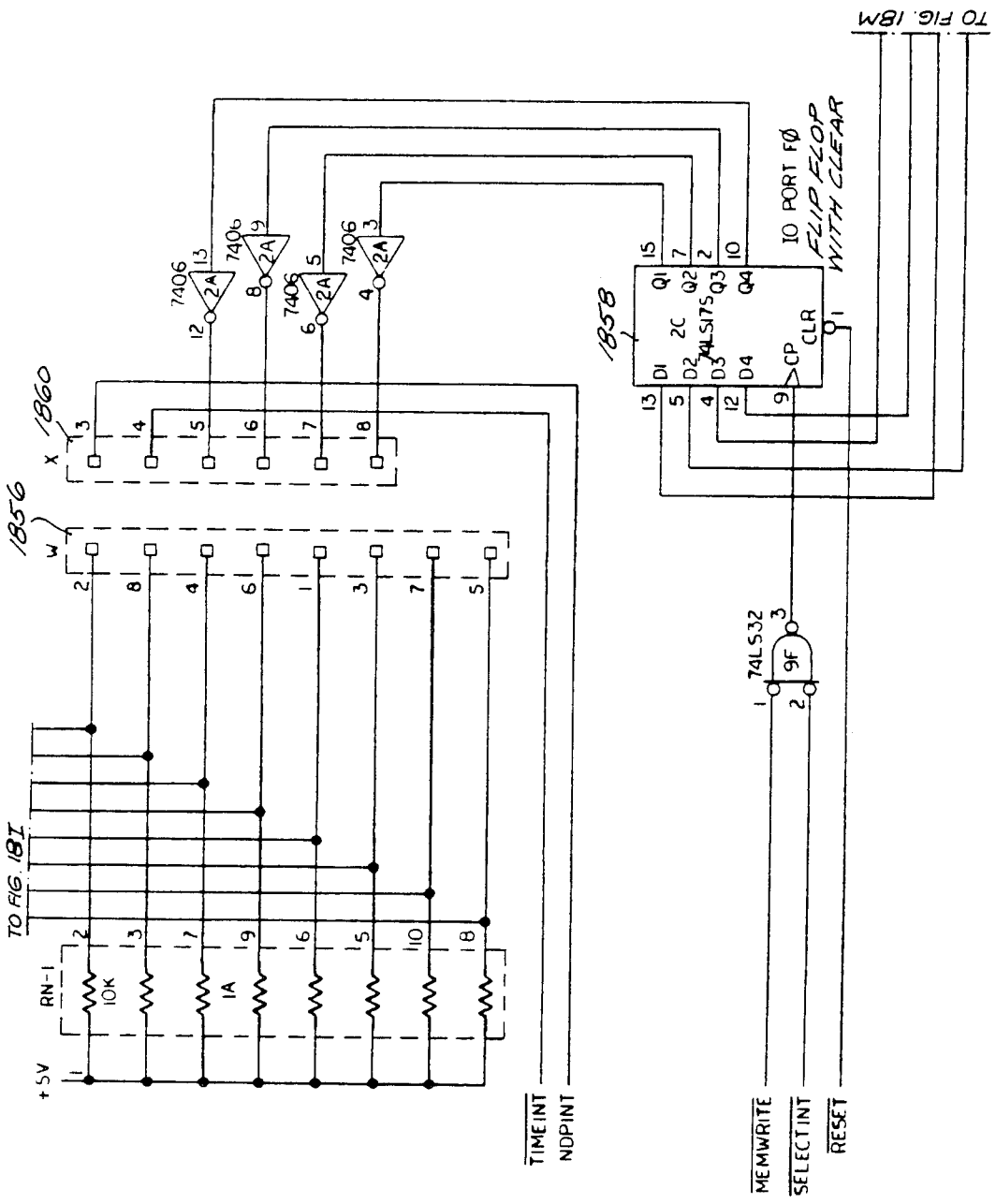
TO FIG. 18M
IO PORT FØ
FLIP FLOP
WITH CLEAR
1858
74LS175
1860
1856
TO FIG. 18I
RN-1
10K
1A
+5V
7406
74LS32
TIMEINT
NDPINT
MEMWRITE
SELECTINT
RESET

FIG. 18J

FIG. 18K

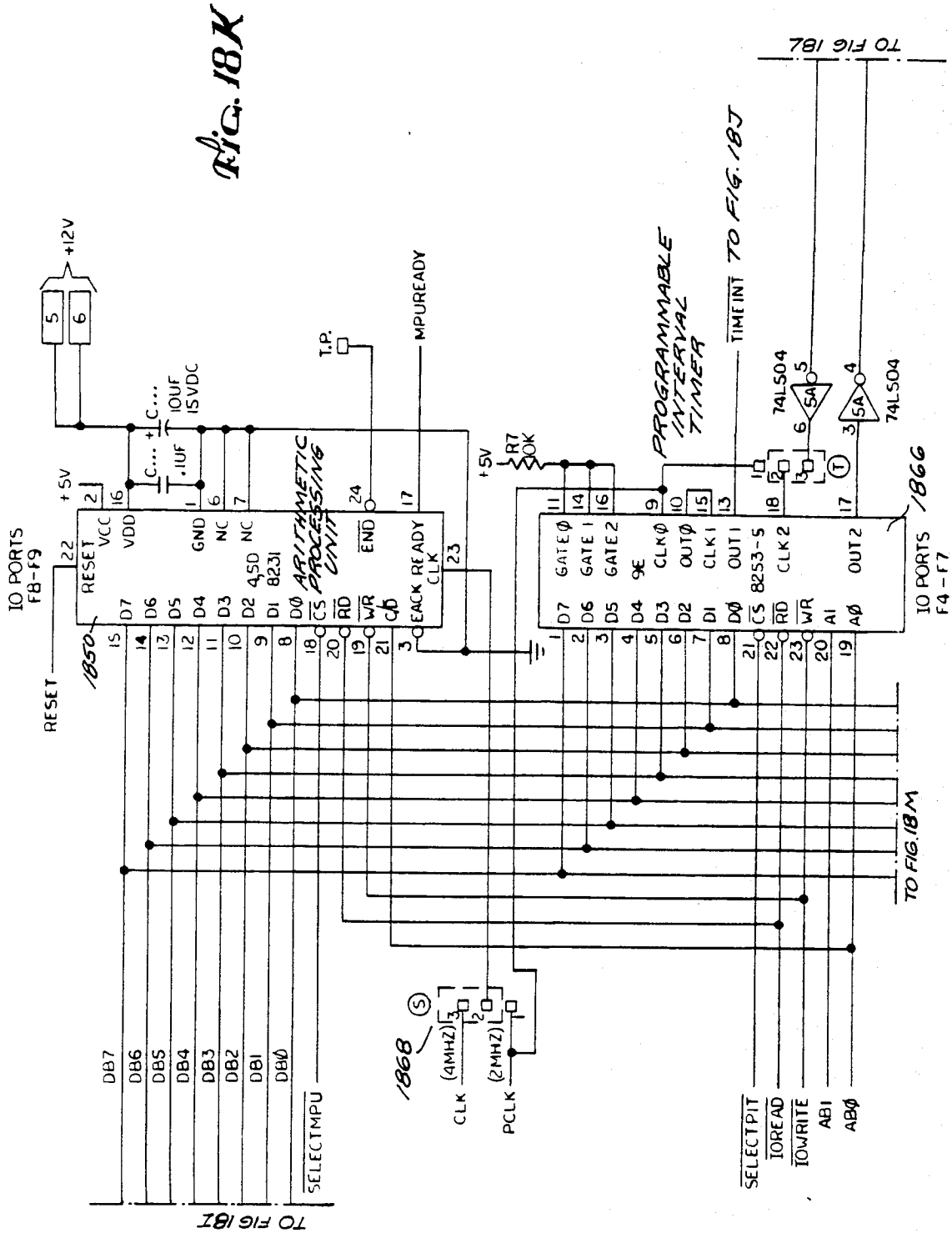
TO FIG 18L
TIMEINT TO FIG. 18J
PROGRAMMABLE INTERVAL TIMER
74LS04
74LS04
+12V
+5V
10UF 15VDC
.1UF
T.P.
MPUREADY
R7 10K
IO PORTS F8-F9
IO PORTS F4-F7
RESET
ARITHMETIC PROCESSING UNIT
4SD 8231
8253-5
1850
1866
1868
(4MHZ)
(2MHZ)
CLK
PCLK
DB7
DB6
DB5
DB4
DB3
DB2
DB1
DBØ
SELECTMPU
SELECTPIT
IOREAD
IOWRITE
AB1
ABØ
TO FIG 18M
TO FIG 18I

FIG. 18L

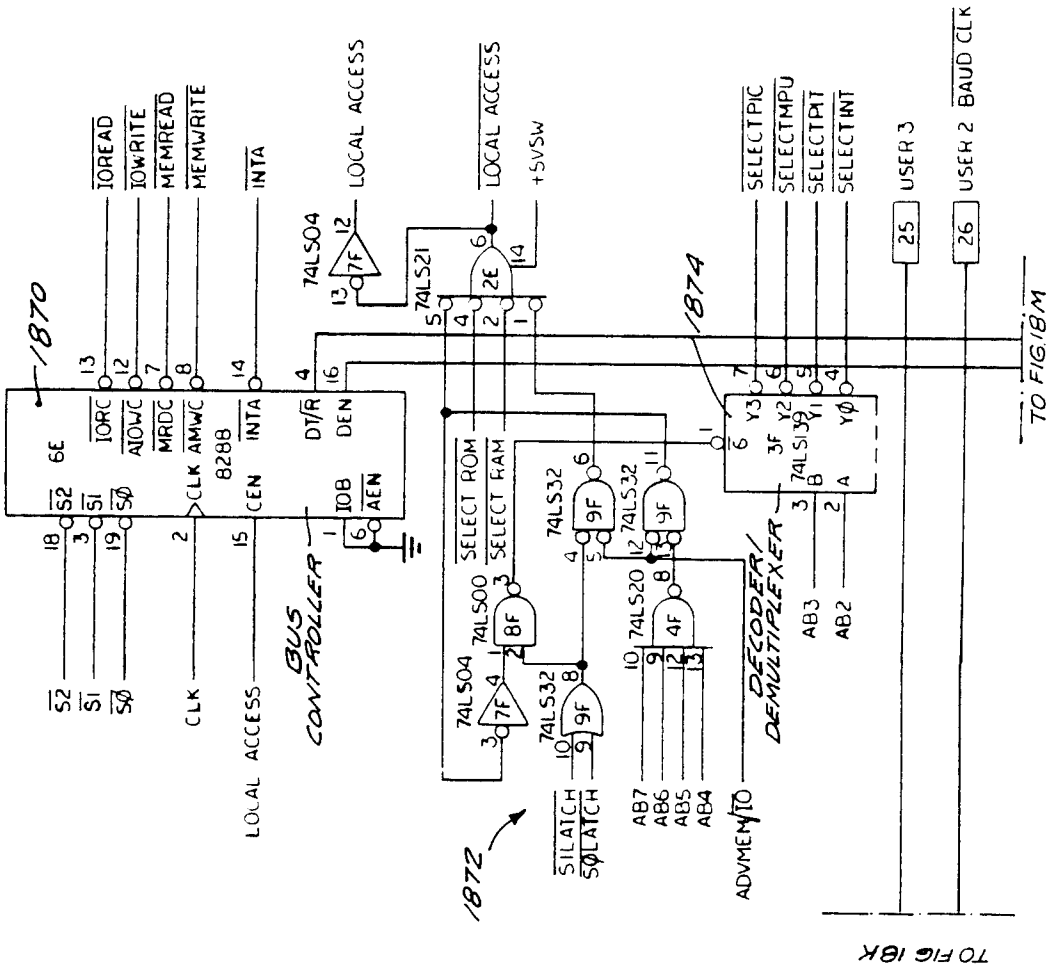
1870
8288
BUS CONTROLLER
IOREAD
IOWRITE
MEMREAD
MEMWRITE
INTA
LOCAL ACCESS
74LS04
74LS21
+5VSW
SELECT ROM
SELECT RAM
74LS00
74LS32
74LS20
74LS139
DECODER/DEMULTIPLEXER
SELECTPIC
SELECTMPU
SELECTPIT
SELECTINT
USER 3
USER 2
BAUD CLK
TO FIG. 18M
TO FIG 18K
1872
1874
SILATCH
SØLATCH
AB7
AB6
AB5
AB4
ADVMEM/TO
AB3
AB2
CLK
S2
S1
SØ
IORC
AIOWC
MRDC
AMWC
DT/R
DEN
IOB
AEN
CEN
CLK

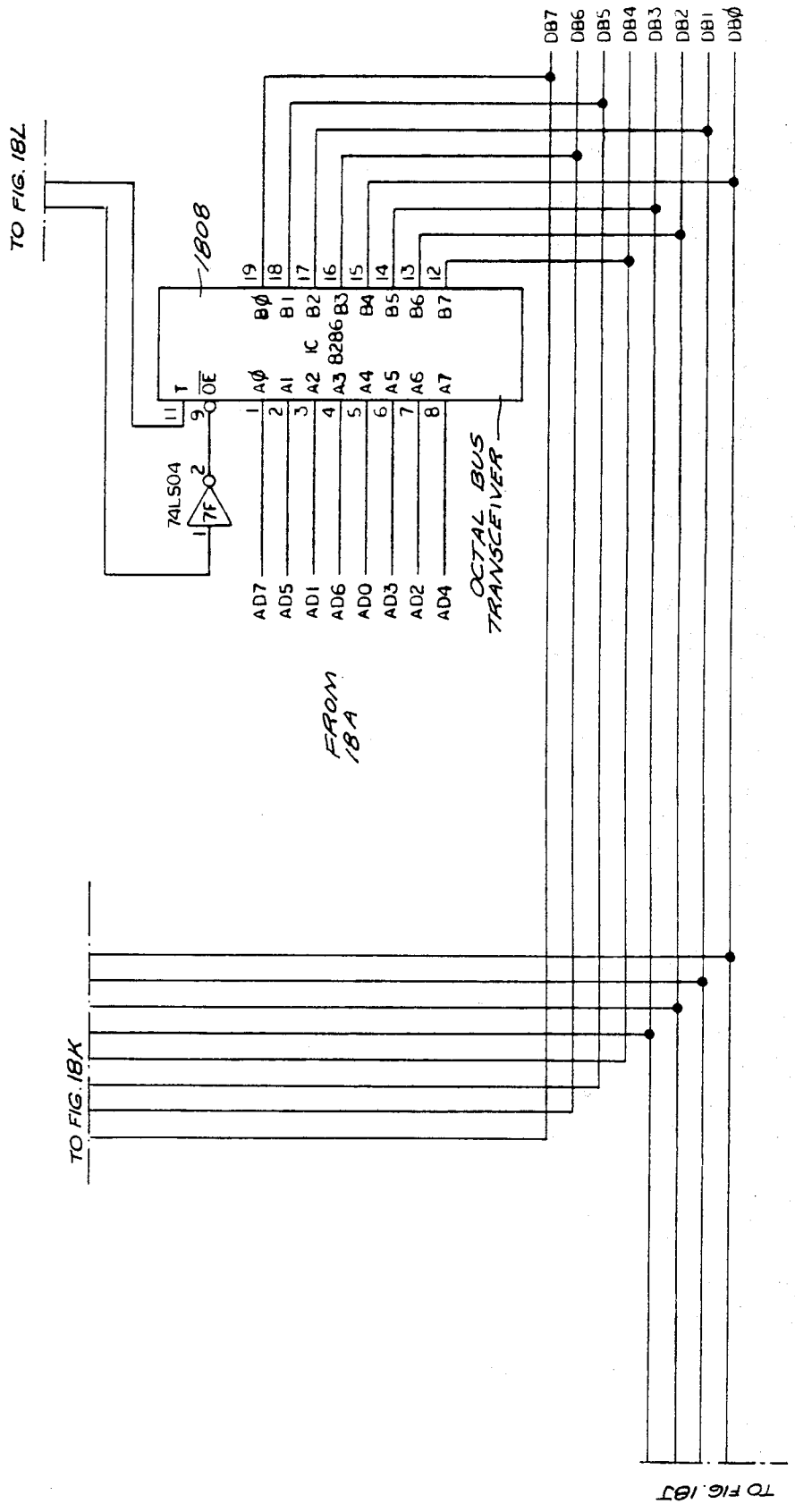
TO FIG. 18L
1808
74LS04
OCTAL BUS TRANSCEIVER
8286
FROM 18A
TO FIG. 18K
TO FIG. 18T
DB7
DB6
DB5
DB4
DB3
DB2
DB1
DB0
AD7
AD5
AD1
AD6
AD0
AD3
AD2
AD4

Fig. 18M

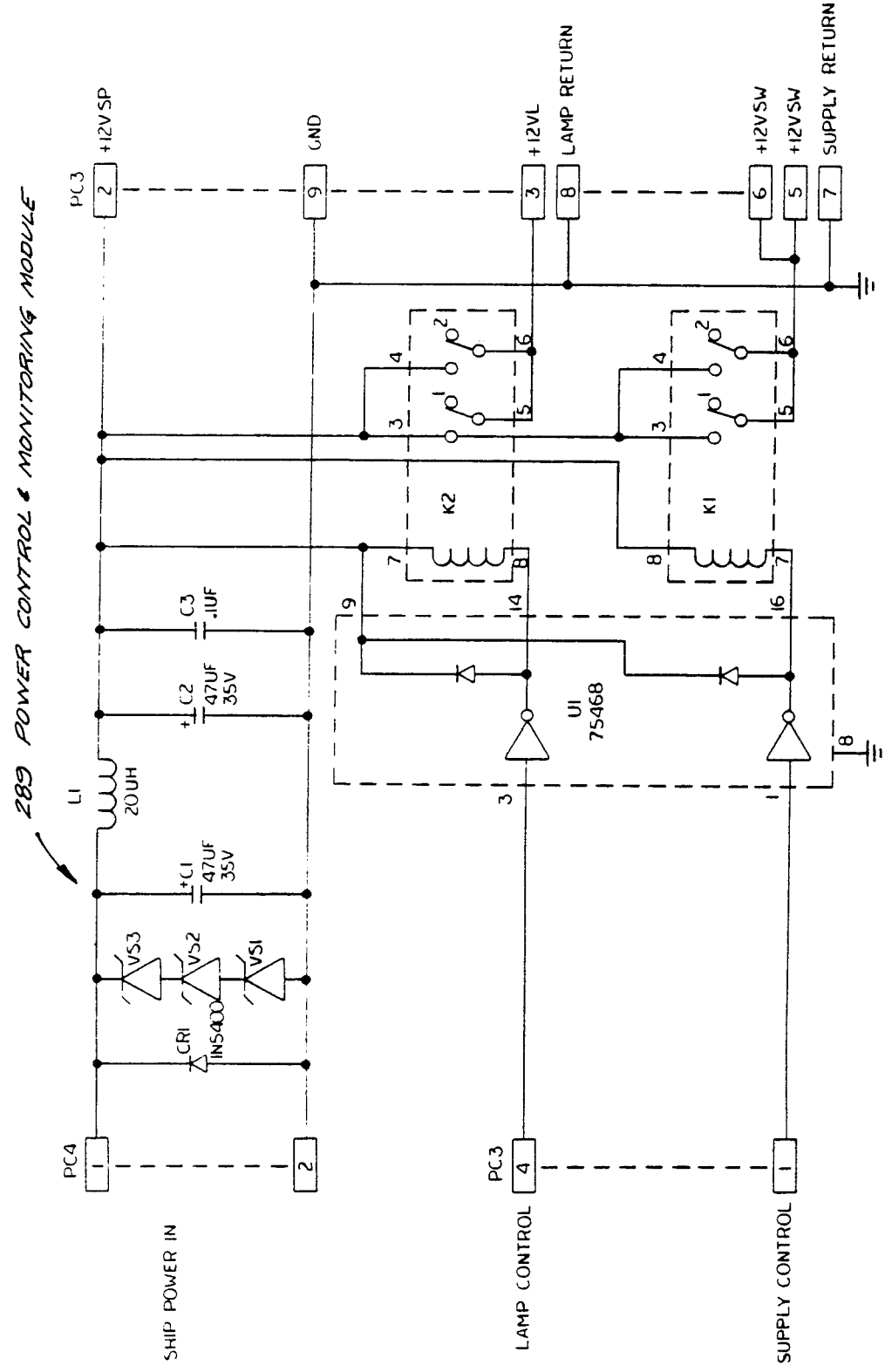
289 POWER CONTROL & MONITORING MODULE
PC3
+12VSP
GND
+12VL
LAMP RETURN
+12VSW
+12VSW
SUPPLY RETURN
K2
K1
C3 .1UF
+C2 47UF 35V
L1 20UH
+C1 47UF 35V
VS3
VS2
VS1
CR1 IN5400
U1 75468
PC4
SHIP POWER IN
PC3
LAMP CONTROL
SUPPLY CONTROL

Fig. 19.

Fig. 20.

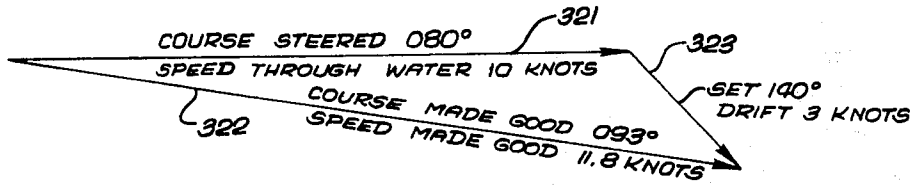

Fig. 21A.

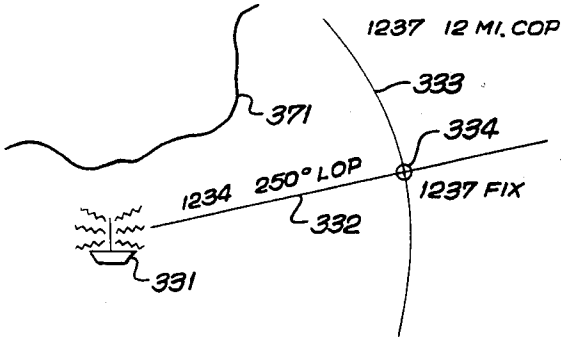

Fig. 21B.

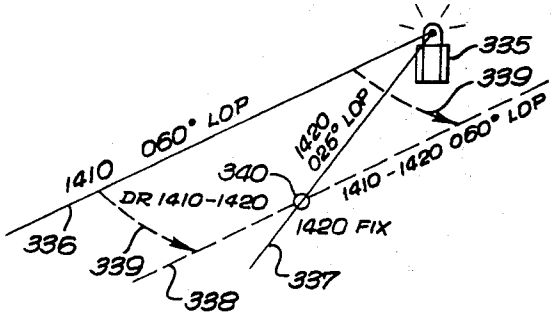

Fig. 21C.

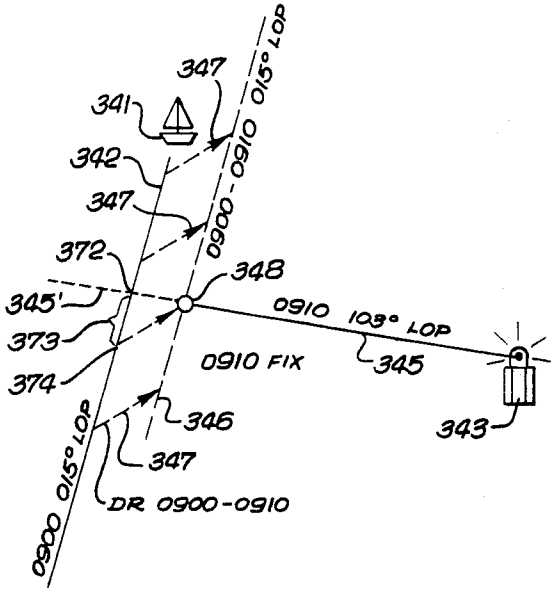

Fig. 21D.

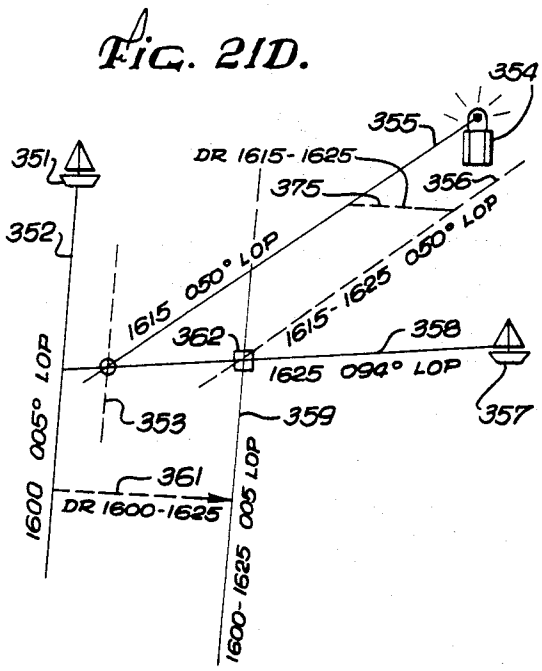

FIG. 22.

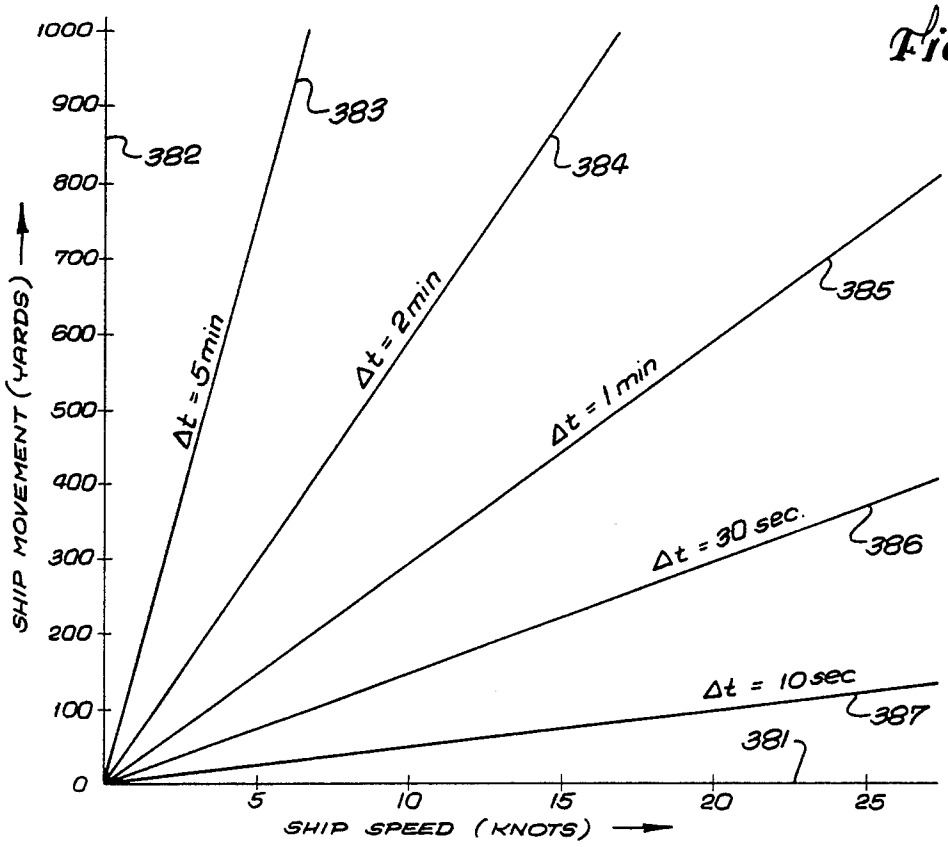
1000
900
800
700
600
500
400
300
200
100
0
SHIP MOVEMENT (YARDS)
5
10
15
20
25
SHIP SPEED (KNOTS)
382
383
384
385
386
387
381
Δt = 5 min
Δt = 2 min
Δt = 1 min
Δt = 30 sec.
Δt = 10 sec

FIG. 23.

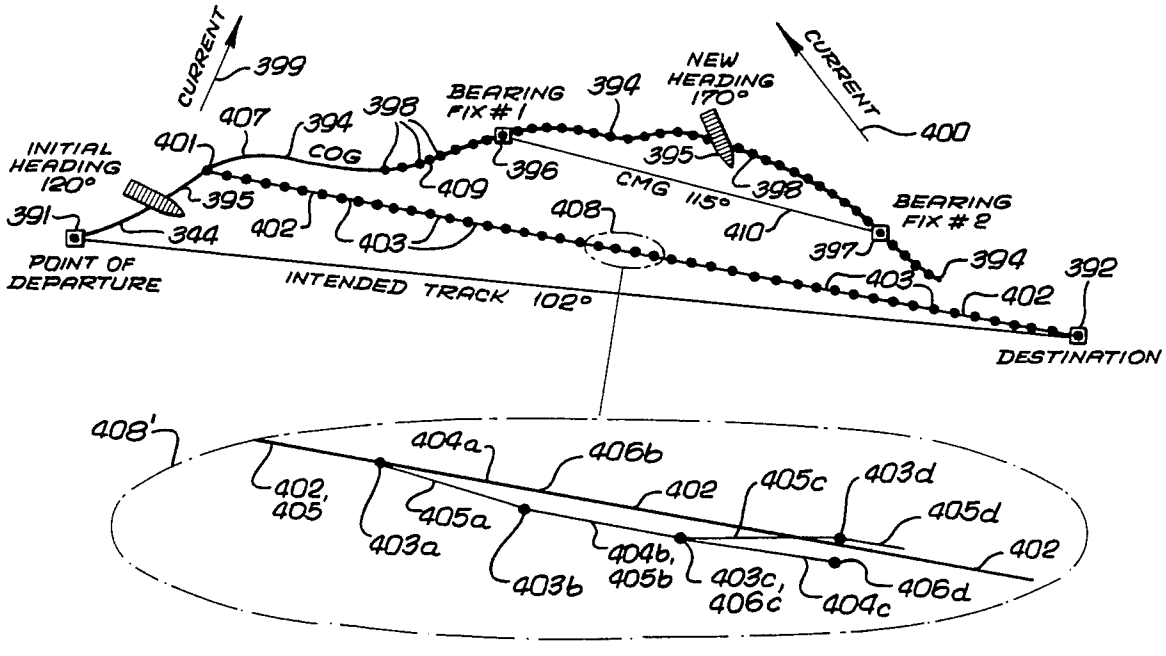
CURRENT
399
CURRENT
400
INITIAL HEADING 120°
401
407
394
COG
398
BEARING FIX # 1
394
NEW HEADING 170°
395
396
409
CMG 115°
398
BEARING FIX # 2
391
344
395
402
403
408
410
397
394
392
403
402
POINT OF DEPARTURE
INTENDED TRACK 102°
DESTINATION
408'
404a
406b
402
405c
403d
405d
402
402, 405
405a
403a
403b
404b, 405b
403c, 406c
404c
406d

Fig. 24.

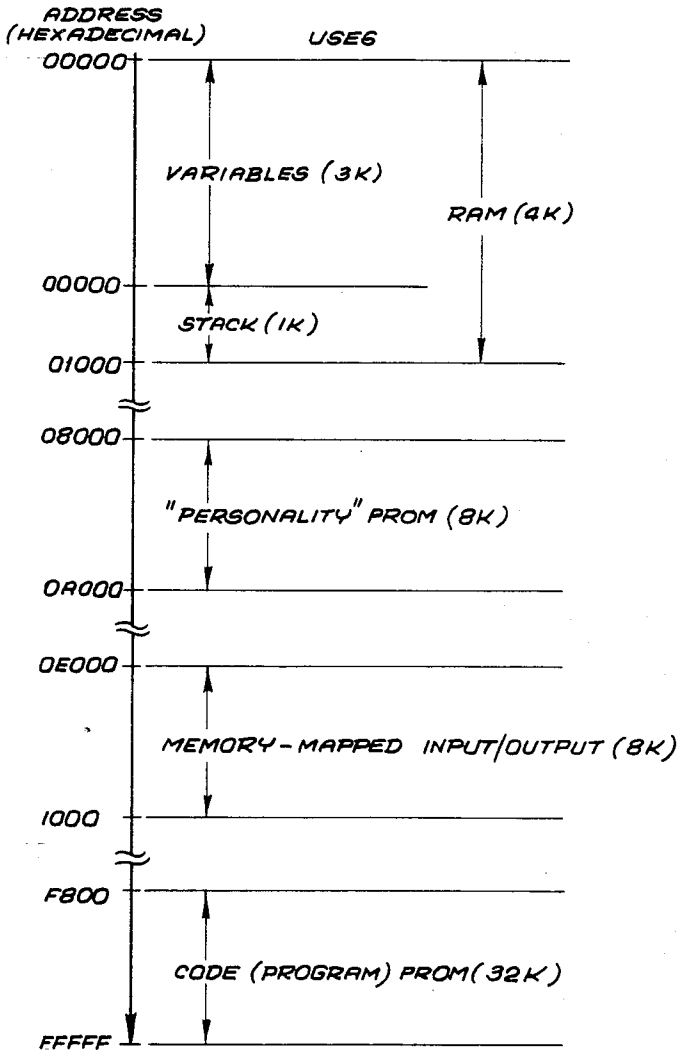
ADDRESS
(HEXADECIMAL)
USES
00000
VARIABLES (3K)
RAM (4K)
00000
STACK (1K)
01000
08000
"PERSONALITY" PROM (8K)
0A000
0E000
MEMORY-MAPPED INPUT/OUTPUT (8K)
1000
F800
CODE (PROGRAM) PROM (32K)
FFFFF

Fig. 25A.

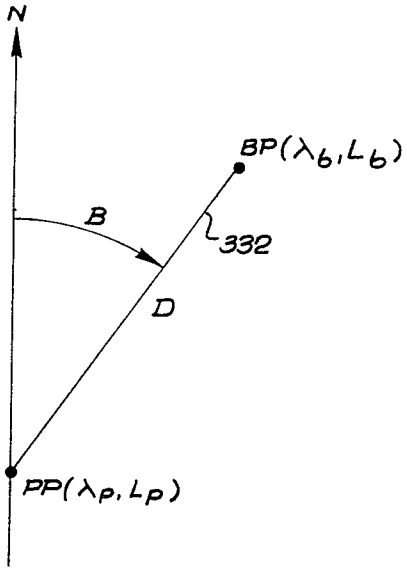

Fig. 25B.

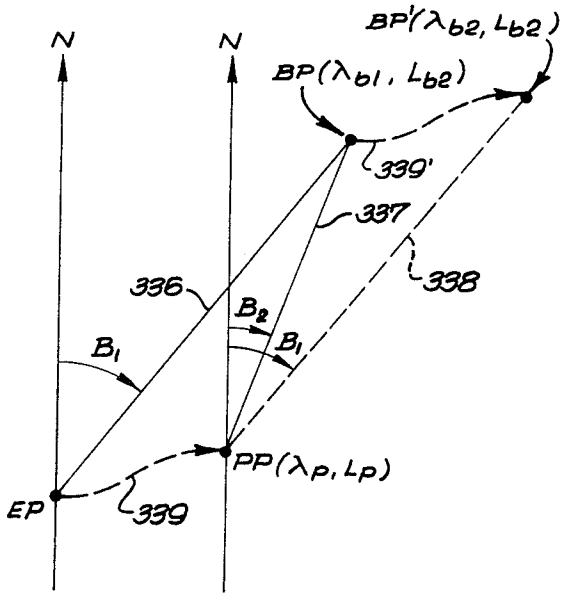

Fig. 25C.

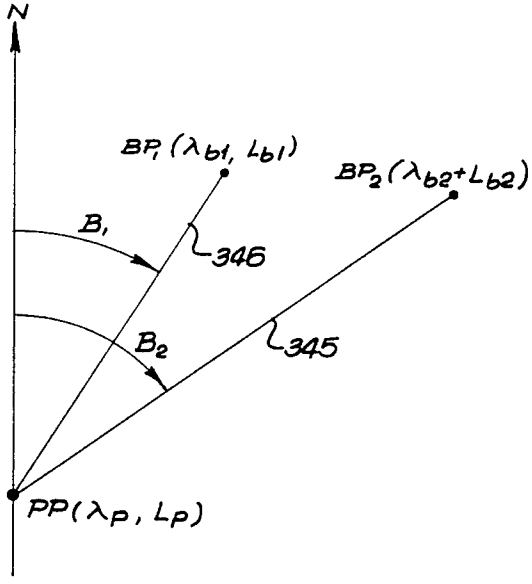

Fig. 25D.

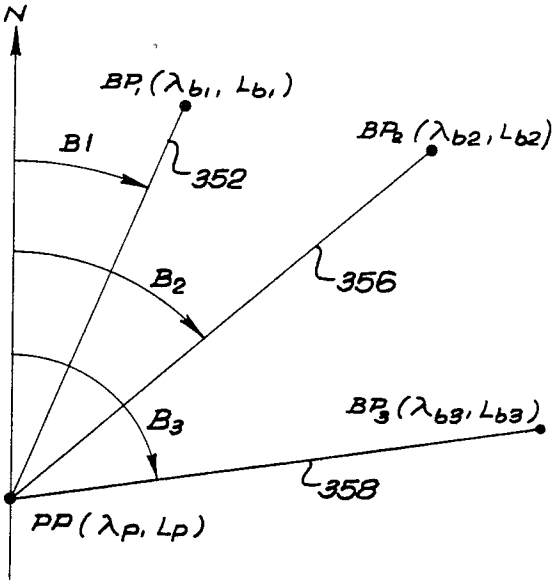

FIG. 26.

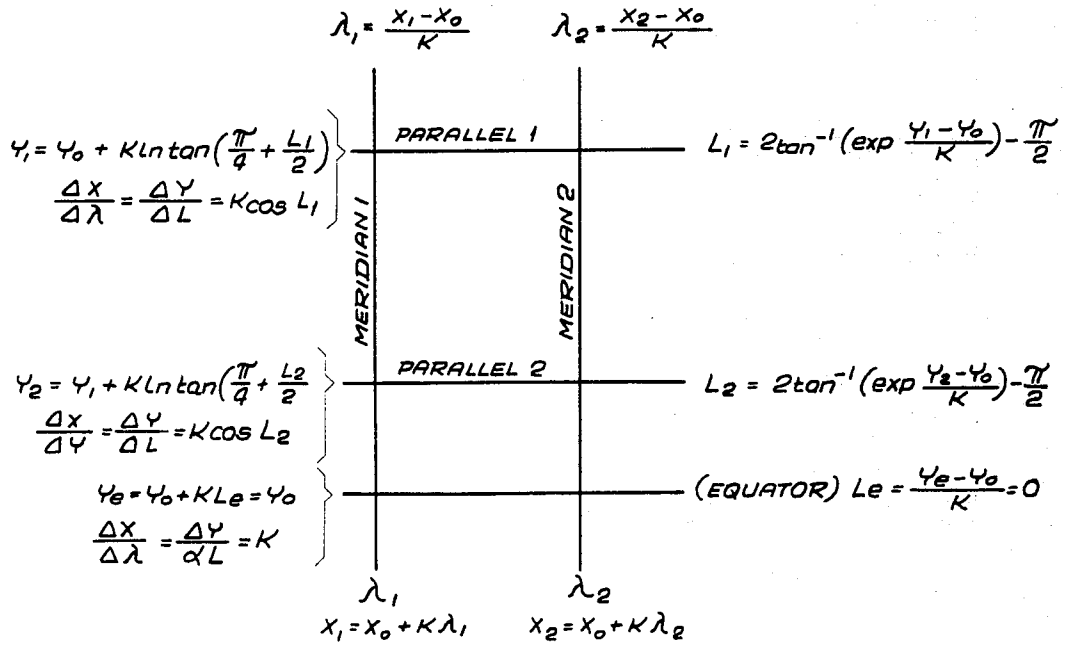

FIG. 27.

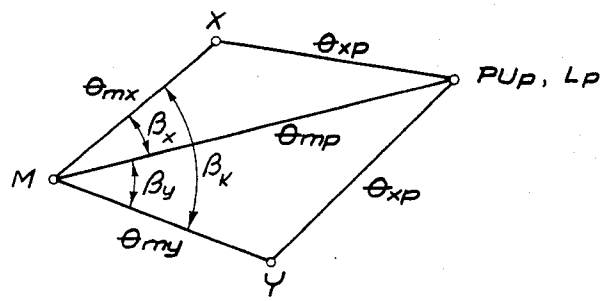

FIG. 28.

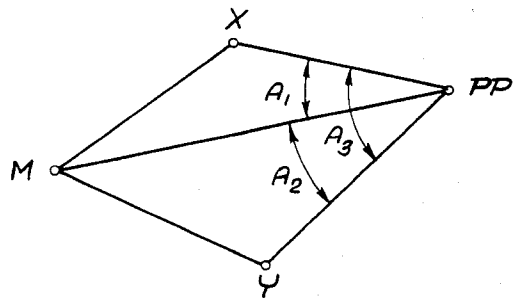

Fig. 29.

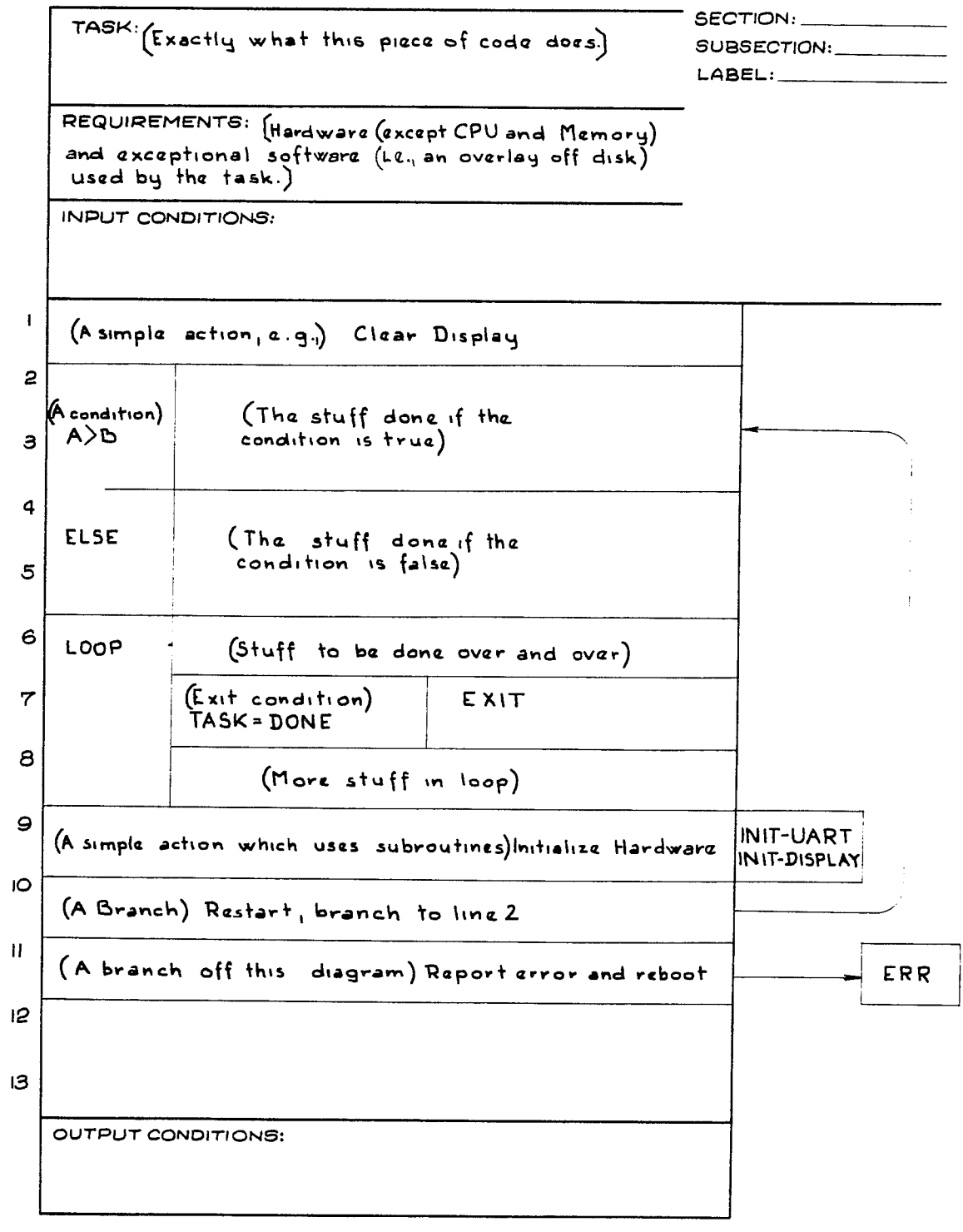
TASK: (Exactly what this piece of code does.)
SECTION:
SUBSECTION:
LABEL:
REQUIREMENTS: (Hardware (except CPU and Memory) and exceptional software (i.e., an overlay off disk) used by the task.)
INPUT CONDITIONS:
1 (A simple action, e.g.,) Clear Display
2 (A condition) A>B
3 (The stuff done if the condition is true)
4 ELSE
5 (The stuff done if the condition is false)
6 LOOP (Stuff to be done over and over)
7 (Exit condition) TASK=DONE EXIT
8 (More stuff in loop)
9 (A simple action which uses subroutines) Initialize Hardware
INIT-UART
INIT-DISPLAY
10 (A Branch) Restart, branch to line 2
11 (A branch off this diagram) Report error and reboot
ERR
12
13
OUTPUT CONDITIONS:

Fig. 30.

TASK:

SECTION: _____
SUBSECTION: _____
LABEL: _____

REQUIREMENTS:

INPUT CONDITIONS:

1	(A case statement) CASE of IGNATZ	
2	63	(This done if IGNATZ = 63)
3	5	(This done if IGNATZ = 5)
4	25	(This done if IGNATZ = 25 and IGNATZ = 63)
5	ELSE	(This done in all other cases)
6	DO CNT = 5 to -25 by -5	
7		(Stuff done 7 times while CNT = 5, 0, -5, -10, -15,
8		-20, and -25. There could be exit conditions in this loop as well.)
9		
10		
11		
12		
13		

OUTPUT CONDITIONS: (Conditions guaranteed met by this task.)

Fig. 31.

TASK: Initialize slave stepper hardware and software

SECTION: Steppers
SUBSECTION:
LABEL: INIT

REQUIREMENTS: Stepper hardware

INPUT CONDITIONS:

1 Initialize status registers; reset manual move flag, automove flag, and eject flag
2
3
4
5
6
7
8
9
10
11
12
13

OUTPUT CONDITIONS: Fall through to EXEC

Fig. 32.

TASK: Wait for a command to be issued

SECTION: Steppers
SUBSECTION:
LABEL: EXEC

REQUIREMENTS: Communication hardware

INPUT CONDITIONS:

1	LOOP	Automove flag	Go to service routine	→ ATOMV
2		Manual Move flag	Go to service routine	→ MANMV
3		Eject flag	Go to service routine	→ EJECT
4				
5				
6				
7				
8				
9				
10				
11				
12				
13				

OUTPUT CONDITIONS: No ordinary exit

Fig. 33.

TASK: Service the automove command

SECTION: Steppers
SUBSECTION:
LABEL: ATOMV

REQUIREMENTS: Communication hardware, Stepper hardware

INPUT CONDITIONS: DELTA X and DELTA Y set to number of steps to be moved

1	LOOP	DELTAX≠0	DELTAX<0	Move one step in -X direction DELTA X = DELTA X + 1
2			ELSE	Move one step in +X direction DELTA X = DELTA X - 1
3		ELSE	DELTAY=0	Quit this loop
4		DELTAY≠0	DELTAY<0	Move one step in -Y direction DELTA Y = DELTA Y + 1
5			ELSE	Move one step in +Y direction DELTAY = DELTAY - 1
6				
7				
8				
9				
10				
11				
12				
13				

OUTPUT CONDITIONS: Normal return, movement complete

Fig. 34.

TASK: Move chart as dictated by closure of N, S, E, and W keys

SECTION: Steppers
SUBSECTION:
LABEL: MANMV

REQUIREMENTS: Steppers hardware, KBD

INPUT CONDITIONS:

1	N key active	DELTA Y = 1	
2	S key active	DELTA Y = -1	
3	E key active	DELTA X = 1	
4	W key active	DELTA X = -1	
5	move as dictated by DELTA X and DELTA Y		ATOMV
6			
7			
8			
9			
10			
11			
12			
13			

OUTPUT CONDITIONS: Return

Fig. 35.

TASK: Accept a byte coming from the master, either a command or data

SECTION: Steppers
SUBSECTION:
LABEL: DATAIN

REQUIREMENTS: Communication hardware

INPUT CONDITIONS:

1	Incoming byte is data	Incoming data expected	Pass the byte to routine requiring input	
2		ELSE	Ignore data	
3	ELSE (byte is a command)	CASE of command		
4		Set Cursors	Go to service routine	→ SC
5		Auto Move	Go to service routine	→ AM
6		Read Cursors	Go to service routine	→ RC
7		Manual Move	Go to service routine	→ MM
8		End Manual Move	Go to service routine	→ EM
9		Eject	Go to service routine	→ EJ
10		ELSE	Ignore byte	
11				
12				
13				

OUTPUT CONDITIONS: Return

Fig. 36.

TASK: Eject chart from cabinet.

SECTION: Steppers
SUBSECTION:
LABEL: EJCT

REQUIREMENTS: Stepper hardware

INPUT CONDITIONS:

1	Move the chart to the north west extreme (motion will be stopped by the north and west limit switches)			ATOMV
2	LOOP	load limit switch engaged	EXIT	
3		Move one step west		
4				
5				
6				
7				
8				
9				
10				
11				
12				
13				

OUTPUT CONDITIONS: Return

Fig. 37.

TASK: Read two numbers from the master and set the current absolute chart coordinates to that position

SECTION: Steppers
SUBSECTION:
LABEL: SC

REQUIREMENTS: Communication hardware

INPUT CONDITIONS:

1	Read X position from master
2	read Y position from master
3	set current absolute coordinates to those values
4	
5	
6	
7	
8	
9	
10	
11	
12	
13	

OUTPUT CONDITIONS: Return

Fig. 38.

TASK: Read an absolute position from the master and move to it

SECTION: Steppers
SUBSECTION:
LABEL: AM

REQUIREMENTS: Communication hardware, stepper hardware

INPUT CONDITIONS:

1	read X position from master
2	read Y position from master
3	compute DELTA X and DELTA Y from current absolute position from master
4	
5	set automove flag
6	
7	
8	
9	
10	
11	
12	
13	

OUTPUT CONDITIONS: Return

Fig. 39.

TASK: Transfer the coordinates of the absolute chart position back to the master

SECTION: Steppers
SUBSECTION:
LABEL: RC

REQUIREMENTS: Communication hardware

INPUT CONDITIONS:

1 Transfer the absolute X position to the master
2 Transfer the absolute Y position to the master
3
4
5
6
7
8
9
10
11
12
13

OUTPUT CONDITIONS: Return

Fig. 40.

TASK: Put the system into manual move mode (i.e., enable cursor movement by the keyboard)

SECTION: Steppers
SUBSECTION:
LABEL: MM

REQUIREMENTS:

INPUT CONDITIONS:

1 Set the manual move flag

2
3
4
5
6
7
8
9
10
11
12
13

OUTPUT CONDITIONS: Return

Fig. 41.

TASK: End the manual move mode (i.e., disable cursor movement by the keyboard)

SECTION: Steppers
SUBSECTION:
LABEL: EM

REQUIREMENTS:

INPUT CONDITIONS:

1 Reset the manual move flag
2
3
4
5
6
7
8
9
10
11
12
13

OUTPUT CONDITIONS: Return

Fig. 42.

TASK: Eject the chart

SECTION: Steppers
SUBSECTION:
LABEL: EJ

REQUIREMENTS:

INPUT CONDITIONS:

1 Set the eject flag
2
3
4
5
6
7
8
9
10
11
12
13

OUTPUT CONDITIONS: Return

Fig. 43.

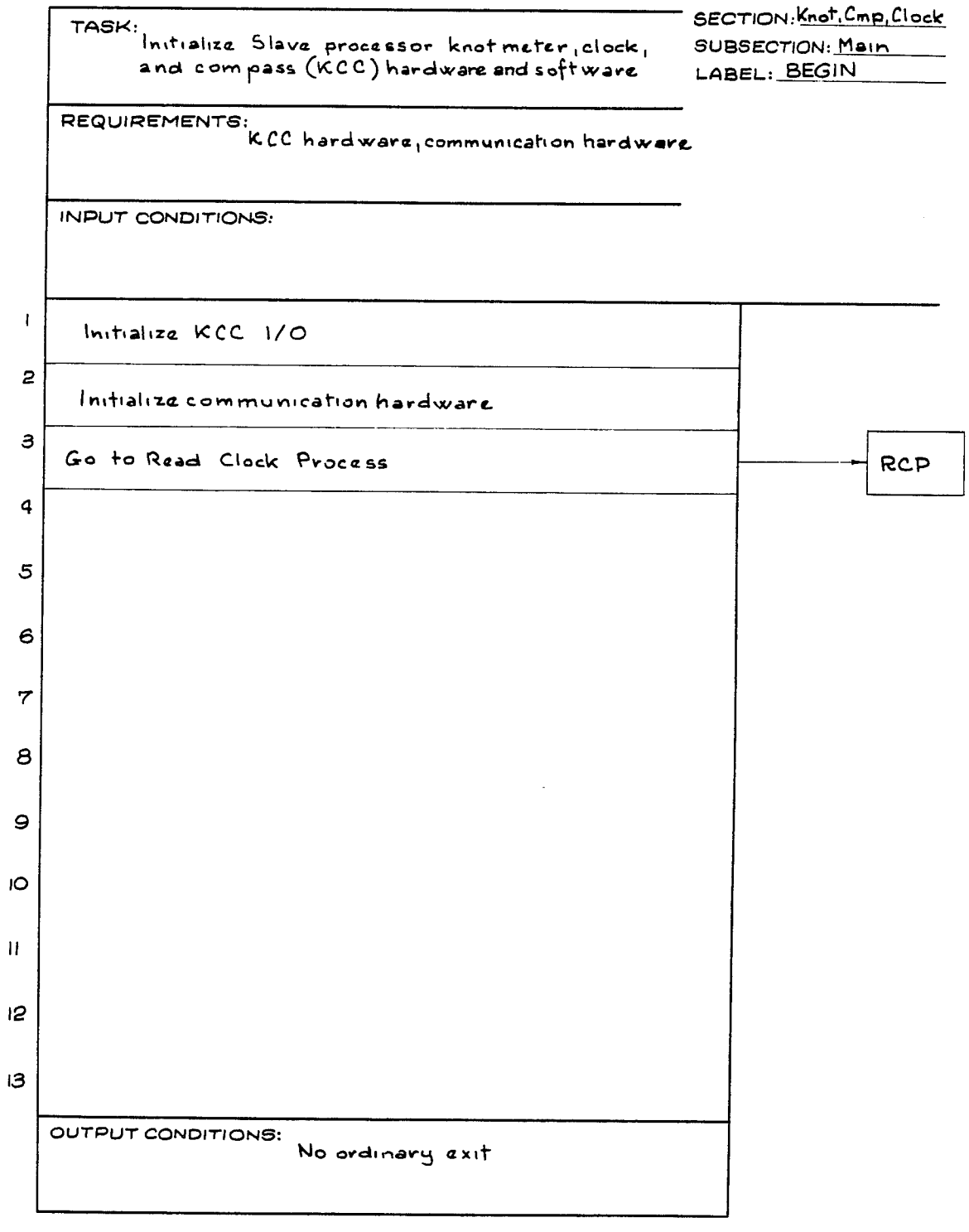
TASK: Initialize Slave processor knot meter, clock, and compass (KCC) hardware and software
SECTION: Knot, Cmp, Clock
SUBSECTION: Main
LABEL: BEGIN
REQUIREMENTS: KCC hardware, communication hardware
INPUT CONDITIONS:
1 Initialize KCC I/O
2 Initialize communication hardware
3 Go to Read Clock Process
RCP
4
5
6
7
8
9
10
11
12
13
OUTPUT CONDITIONS: No ordinary exit

Fig. 44.

TASK: Read 13 nibbles from the clock calendar chip and pack them into 7 bytes

SECTION: KCC
SUBSECTION:
LABEL: RCP

REQUIREMENTS: Clock chip

INPUT CONDITIONS:

1	Initialize pointer to temporary buffer		
2	Read and pack first two nibbles		
3	Read and pack 3rd, 4th nibbles		
4	Read and pack 5th, 6th nibbles		
5	Read and pack 7th nibble		
6	Read and pack 8th, 9th nibbles		
7	Read and pack 10th, 11th nibbles		
8	Read and pack 12th, 13th nibbles		
9	Transfer temporary buffer to clock calendar buffer		
10	Read Compass is next process	Go to read compass process	→ RCOP
11	ELSE	Go to read knot meter process	→ RKP
12			
13			

OUTPUT CONDITIONS: No ordinary exit

Fig. 45.

TASK: Read digital compass (i.e. count pulses in one burst)

SECTION: KCC
SUBSECTION:
LABEL: RCOP

REQUIREMENTS: Compass Hardware

INPUT CONDITIONS:

1	Compass not present	Fill compass buffer with FFH
2	ELSE	Wait for end of current burst
3		Wait for beginning of next burst
4		Start counter
5		Wait for end of this burst
6		Transfer count to compass data buffer
7	Wait for interrupt	
8		
9		
10		
11		
12		
13		

OUTPUT CONDITIONS: No ordinary exit

Fig. 46.

	TASK: Read the knotmeter (i.e., count the length of time two pulses takes)		SECTION: KCC SUBSECTION: LABEL: RKP
	REQUIREMENTS: Knotmeter hardware		
	INPUT CONDITIONS:		
1	Fill knotmeter buffer with FF's		
2	Knotmeter present	Wait for low to high transition	
3		Start timer	
4		Wait for high to low transition	
5		Wait for low to high transition	
6		Store timer count in knotmeter buffer	
7	Wait for interrupt		
8			
9			
10			
11			
12			
13			
	OUTPUT CONDITIONS: No ordinary exit		

Fig. 47.

TASK: Accept a byte of data coming from the master to the KCC section, either a command or data

SECTION: KCC
SUBSECTION:
LABEL: DATAIN

REQUIREMENTS: Communication hardware

INPUT CONDITIONS:

1	Incoming byte is a command	CASE of command		
2		Read command	Branch to read all routine	→ RA
3		Write clock	Branch to write clock routine	→ WC
4		ELSE	Do nothing	
5		Read instruments again, start with clock		→ RCP
6	ELSE	Incoming data expected	Pass data to write clock routine	
7		ELSE	Ignore incoming data	
8				
9				
10				
11				
12				
13				

OUTPUT CONDITIONS: Sometimes a return

Fig. 48.

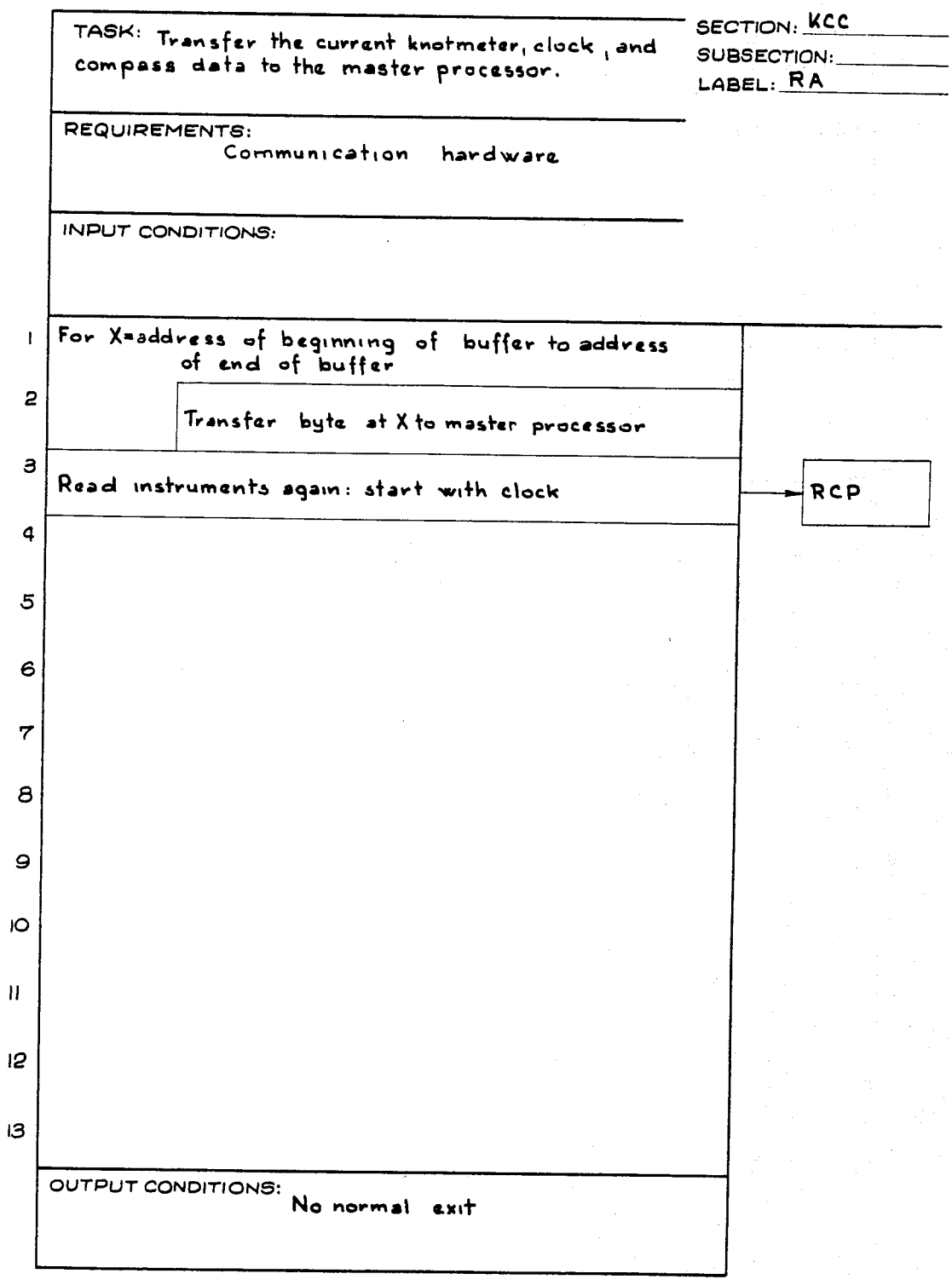
TASK: Transfer the current knotmeter, clock, and compass data to the master processor.
SECTION: KCC
SUBSECTION:
LABEL: RA
REQUIREMENTS:
Communication hardware
INPUT CONDITIONS:
1
For X=address of beginning of buffer to address of end of buffer
2
Transfer byte at X to master processor
3
Read instruments again: start with clock
RCP
4
5
6
7
8
9
10
11
12
13
OUTPUT CONDITIONS:
No normal exit

Fig. 49.

TASK: Set the clock chip based on 7 bytes to come from the master

SECTION: KCC
SUBSECTION:
LABEL: WC

REQUIREMENTS: Communication hardware, clock chip.

INPUT CONDITIONS:

1	For X = 1 to 7
2	Accept a byte from the master and put it into a temporary buffer
3	Unpack the first byte and send 2 nibbles to clock
4	Unpack the second byte and send 2 nibbles to clock
5	Unpack the third byte and send 2 nibbles to clock
6	Unpack the fourth byte and send 1 nibble to clock
7	Unpack the fifth byte and send 2 nibbles to clock
8	Unpack the sixth byte and send 2 nibbles to clock
9	Unpack the seventh byte and send 2 nibbles to clock
10	Read the instruments: start with clock → RCP
11	
12	
13	

OUTPUT CONDITIONS: No ordinary exit

Fig. 50.

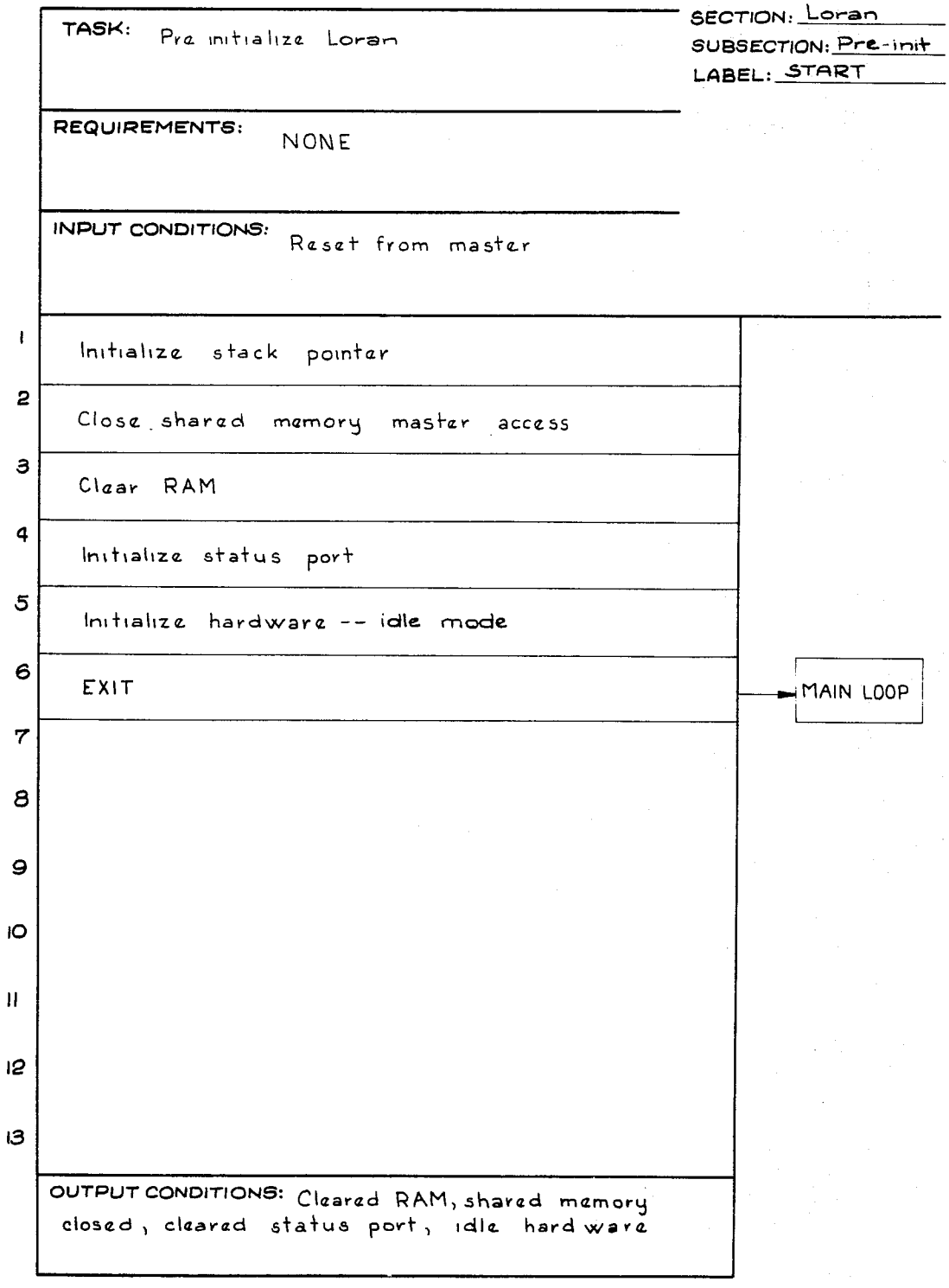
TASK: Pre initialize Loran
SECTION: Loran
SUBSECTION: Pre-init
LABEL: START
REQUIREMENTS: NONE
INPUT CONDITIONS: Reset from master
1 Initialize stack pointer
2 Close shared memory master access
3 Clear RAM
4 Initialize status port
5 Initialize hardware -- idle mode
6 EXIT
MAIN LOOP
7
8
9
10
11
12
13
OUTPUT CONDITIONS: Cleared RAM, shared memory closed, cleared status port, idle hardware

Fig. 51.

TASK: Main program loop

SECTION: Loran
SUBSECTION: Main
LABEL: MAINLP

REQUIREMENTS:

INPUT CONDITIONS: Pre initialize executed

1	LOOP		Enable master interupt of slave	
2			Open shared memory	
3			Int master -- task done	
4			Wait for master command issued	
5			Close shared memory	
6			Clear mode bits in state vector	
7			Clear error byte	
8			Read masters command	
9		Valid command issued	Call command subroutine	INITIALIZE or DIAGNOSTIC or ACQUIRE
10		ELSE	Set error byte	
11				
12				
13				

OUTPUT CONDITIONS: No exit from this loop

Fig. 52.

	TASK: Command -- Diagnostic	SECTION: Loran SUBSECTION: Diagnostic LABEL: CMDDIA
	REQUIREMENTS: NONE	
	INPUT CONDITIONS: NONE	
1	Test RAM [marching bit test], set dia. byte	
2	Test ROM [checksum test], set dia. byte	
3	Test 32 bit shift register, set dia. byte	
4	Test shift counter, set dia. byte	
5	Test timer 1, set dia. byte	
6	Test timer 2, set dia. byte	
7	Test real time clock, set dia. byte	
8	Test uart & baud clock, set dia. byte	
9	Test Loran strapping, set dia. byte	
10	Read diagnostic mask, mask dia. bytes	Loran module data table
11	Set state vector -- diagnostic mode	
12	Diagnostic errors: Set error byte -- diagnostic fail	
13	Return to main loop	
	OUTPUT CONDITIONS: Error diagnostic bytes, error byte state vector	

Fig. 53.

TASK: Command -- Initialize

SECTION. Loran
SUBSECTION: Initialize
LABEL: CMDINT

REQUIREMENTS: NONE

INPUT CONDITIONS: NONE

1	Clear state vector, error byte , error counters	
2	Clear timeout values, module wrkspc, L.O.R.'s	
3	Set state vector -- initialize mode	
4	Program & strapping present	set Loran module address pointer
5		set state vector -- Pgm selected
6	Return to main LOOP	
7		
8		
9		
10		
11		
12		
13		

OUTPUT CONDITIONS: Cleared program variables, state vector loran module address pointer

Fig. 54.

TASK: Command --acquire

SECTION: Loran
SUBSECTION: Acquire
LABEL: CMOAQR

REQUIREMENTS: NONE

INPUT CONDITIONS: NONE

1	Set state vector -- acquire mode		
2	Program not selected	Set error byte	
3	ELSE	Clear L.O.R.'s	
4		Clear module wrkspc	
5		Clear error byte, error counter data age, status port, time out counters	
6		Read hardware control bytes from selected Loran module	Loran module data table
7		Program hardware for selected Loran	
8		Start Loran module timer	
9		Acquire Loran data	Loran specific pgm module
10		Update state vector, error byte	
11	Return to main LOOP		
12			
13			

OUTPUT CONDITIONS: State vector, L.O.R.'s, error bytes

Fig. 55.

TASK: Loran specific module
module acquires Loran data

SECTION: Loran
SUBSECTION: Modules
LABEL: MODX

REQUIREMENTS: NONE

INPUT CONDITIONS: Timeout timer set & enabled error limit set

1	LOOP	Acquire data	UPDATE STATUS PORT
2		Check error limit & time out	
3		Error limit or time out or Loran data acquired: EXIT	
4	Set return condition		
5	Return to Main LOOP		
6			
7			
8			
9			
10			
11			
12			
13			

OUTPUT CONDITIONS: Loran data in L.O.R.'s
error byte, error counters, data age

Fig. 56.

	TASK: Decide if battery protected memory has been preserved or not and initialize the hardware	SECTION: Main SUBSECTION: V01 LABEL: INIT
	REQUIREMENTS: I/O devices to be initialized	
	INPUT CONDITIONS:	
1	Test for battery low voltage. Checksum RAM.	
2	Initialize 8259 PIC to all interrupts masked.	
3	Initialize 8253 CTC: counters 0, 1 to divide 4 MHz down to 10 Hz for real time interrupt, counter 2 to generate 9600 baud clock.	
4	Initialize the 8279 KBD display chip.	
5	Initialize the 24-character display (2416's) to all blanks with no cursors.	
6	Initialize the printer and serial channel UARTs.	
7	Initialize the slave processors.	
8	Initialize the Loran drivers.	
9		
10		
11		
12		
13		
	OUTPUT CONDITIONS: Hardware initialized Go to MAIN with power-fail flag set as per line 1	

Fig. 57.

TASK: Initialize the relevant memory location - vectors, variables, and flags.

SECTION: Main
SUBSECTION: Sys
LABEL: MAIN

REQUIREMENTS: User I/O (KBD, KBD LED's, Display, Cursor)

INPUT CONDITIONS: Power-fail flag (PF)

1	Set interrupt vectors.		
2	Power-fail? PF?	Initialize permanently stored values to defaults.	
3	Initialize operating flags to default operating state.		
4	Initialize general use variables to default.		
5	Enable interrupts		
6	Power-fail? PF?	Do memory maintenance	MEM MAINT
7			
8			
9			
10			
11			
12			
13			

OUTPUT CONDITIONS: System initialized
Fall through to DR MODE

Fig. 58.

TASK: Repeatedly poll for service whatever may be needed

SECTION: Main
SUBSECTION: Sys
LABEL: DR MODE

REQUIREMENTS: User I/O

INPUT CONDITIONS: System initialized

1	LOOP	OPR MODE = Loran ?	Branch to Loran mode	→ LORAN MODE
2		Poll for function requests and input requests		POLL FUNC-INP
3				
4				
5				
6				
7				
8				
9				
10				
11				
12				
13				

OUTPUT CONDITIONS: No normal exit occurs (Return or fall through)

Fig. 59.

TASK: Initialize Loran process and repeatedly poll for service

SECTION: Main
SUBSECTION: Sys
LABEL: LORAN MODE

REQUIREMENTS: User I/O

INPUT CONDITIONS: System initialized

1	Initialize Loran variables			
2	Input GRI			DO INPUTS
3	LOOP	Valid GRI not yet selected? Input GRI		
4		OPR MODE=DR Branch to DR MODE		→ DR MODE
5		Time since triad selected? ≥ 10 mins. or no triad selected?	Select or re-select Loran triad	LRN SEL-PR
6		Time since Loran fix ≥ 1 min.?	Do a Loran fix	LRN FIX
7				
8				
9				
10				
11				
12				
13				

OUTPUT CONDITIONS: No normal exit occurs

Fig. 60.

TASK: Service any outstanding function or INPUT requests.

SECTION: Main
SUBSECTION: Sys
LABEL: POLL FUNC INP

REQUIREMENTS: User I/O

INPUT CONDITIONS: OPR and INPUTS contain any requests to be serviced.

CASE of OPR FUNC

(No funcs requested)	Poll for input requests	DO INPUTS
A numbered function	Do a numbered function	FUNC NUM
Destination function	Do destination function	FUNC DEST
Bearing Fix function	Do bearing fix function	FUNC BRG-FIX
Manual move function	Do manual move function	FUNC MANL
Load chart function	Do load chart function	FUNC LOAD

OUTPUT CONDITIONS: Return

Fig. 61.

TASK: Service a keyboard interrupt, i.e., the occurrence of any key closure, either shifted (with the f key) or not.

SECTION: Main
SUBSECTION: Sys
LABEL: KBD INT

REQUIREMENTS: KBD controller

INPUT CONDITIONS: KBD controller has a one byte key code for the CPU. Subroutine invoked by interrupt.

1	Fetch key code from KBD controller	
2	Key is a display key	DSP MODE NTL = DSP MODE LST DSP MODE LST = Key
3	Key is a mode key	OPR MODE = key
4	Key is a function key	OPR FUNC = key
5	Key is a shifted digit	OPR FUNC = numbered function numbered function's number = key
6	Key is a shifted display key	INPUTS = key
7	Put key code into global variable INPUT KEY to be passed back on return for numeric entry procedures	
8	and wait for key routines	
9		
10		
11		
12		
13		

OUTPUT CONDITIONS: Return with global variable INPUT KEY set to code of key just struck and interrupts enabled

Fig. 64.

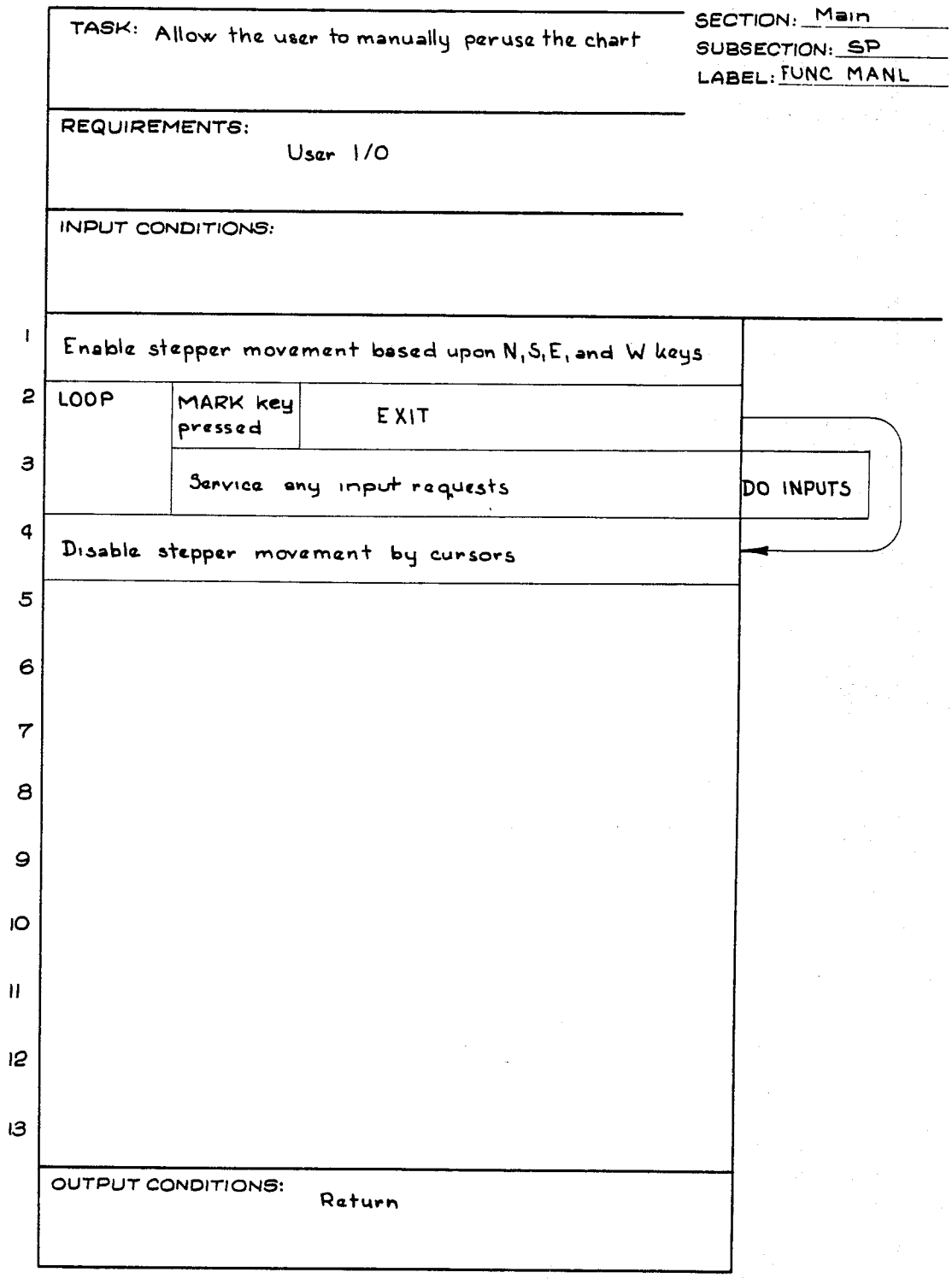
TASK: Allow the user to manually peruse the chart
SECTION: Main
SUBSECTION: SP
LABEL: FUNC MANL
REQUIREMENTS:
User I/O
INPUT CONDITIONS:
1
Enable stepper movement based upon N, S, E, and W keys
2
LOOP
MARK key pressed
EXIT
3
Service any input requests
DO INPUTS
4
Disable stepper movement by cursors
5
6
7
8
9
10
11
12
13
OUTPUT CONDITIONS:
Return

Fig. 65.

TASK: Allow the user to get a position fix from either a bearing and distance, two bearings, or three bearings

SECTION: Main
SUBSECTION: Bearing Fix
LABEL: FUNC BRG FIX

REQUIREMENTS: User I/O

INPUT CONDITIONS:

1	Ask user if he wishes to enter new bearing points			GET YN
2	He does want to enter new bearing points	Input number of points to be entered.		INP NUM
3		DO X=1 to number of points to be entered		
4			Input position of bearing point X	INP NUM
5	Ask user if he wants to enter bearings			GET YN
6	He does want to enter bearings	Input number of bearings to be entered		INP NUM
7		DO X=1 to number of bearings to be entered		
8			Input the number of the point upon which a bearing is to be taken	INP NUM
9			Input bearing upon that point.	INP NUM
10		CASE of number of bearings taken		
11		1	Input distance to that bearing point	INP NUM
12			Get a bearing distance fix	BRG DIST
13				

OUTPUT CONDITIONS:

Fig. 66

TASK:

SECTION: Main
SUBSECTION: Bearing Fix
LABEL: FUNC BRG FIX

REQUIREMENTS:

INPUT CONDITIONS:

1	2	Get a two bearing fix.	TWOPOINT
2	3	Get a three bearing fix.	THREEPOINT
3			
4			
5			
6			
7			
8			
9			
10			
11			
12			
13			

OUTPUT CONDITIONS:

Fig. 67.

TASK: Perform the destination function

SECTION: Main
SUBSECTION: SP
LABEL: FUNC DEST

REQUIREMENTS: User I/O

INPUT CONDITIONS:

1	INPUT the number of the current way point to be used			INP NUM
2	LOOP	ENT key struck	EXIT	
3		Poll for requested INPUTS		DO INPUTS
4				
5				
6				
7				
8				
9				
10				
11				
12				
13				

OUTPUT CONDITIONS: Return

Fig. 68.

TASK: Support the number functions

SECTION: Main
SUBSECTION: SP
LABEL: FUNC NUM

REQUIREMENTS: User I/O, instrument I/O

INPUT CONDITIONS:

1	Input the number of the function	INP NUM
2	Call the appropriate number function support routine	Numbered function support routine
3		
4		
5		
6		
7		
8		
9		
10		
11		
12		
13		

OUTPUT CONDITIONS: Return

Fig. 69.

TASK: Service the Inputs request flag
INPUTS based upon current OPR FUNC

SECTION: Main
SUBSECTION: Input
LABEL: DO INPUTS

REQUIREMENTS: User I/O

INPUT CONDITIONS:

1	CASE of INPUTS			
2	GRI TD	OPR FUNC = DEST or MANL	Set cursor (if MANL) or current way point (if DEST) to location of inputed TD's	INP NUM
3		ELSE	Input current GRI	INP NUM
4			selected Loran not in personality PROM: Display "INVALID GRI" for 2 secs.	
5	LAT LONG		Input a Latitude and Longitude	GET POS
6			set cursor (if OPR FUNC = MANL), current way point (if OPR FUNC = DEST) or present position to that location	
7	SET DRIFT		Input the Set and Drift	INP NUM
8	DIR SPD		Input the vessel's direction and speed.	INP NUM
9	INPUTS = No Input requested			
10				
11				
12				
13				

OUTPUT CONDITIONS: INPUTS done, return

Fig. 70.

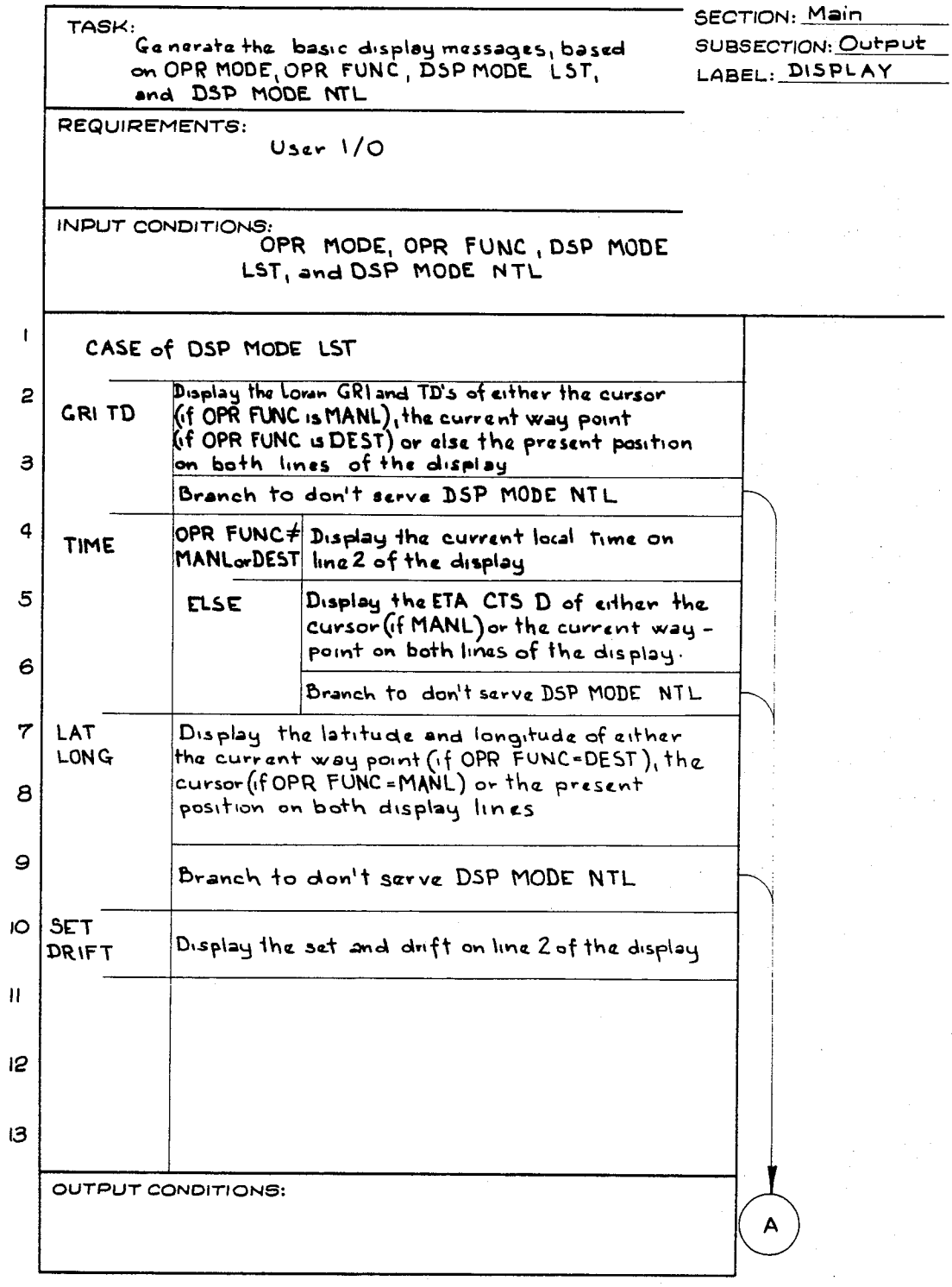
TASK:
Generate the basic display messages, based on OPR MODE, OPR FUNC, DSP MODE LST, and DSP MODE NTL
SECTION: Main
SUBSECTION: Output
LABEL: DISPLAY
REQUIREMENTS:
User I/O
INPUT CONDITIONS:
OPR MODE, OPR FUNC, DSP MODE LST, and DSP MODE NTL
1 CASE of DSP MODE LST
2 GRI TD
Display the Loran GRI and TD's of either the cursor (if OPR FUNC is MANL), the current way point (if OPR FUNC is DEST) or else the present position on both lines of the display
3 Branch to don't serve DSP MODE NTL
4 TIME
OPR FUNC≠ MANL or DEST
Display the current local time on line 2 of the display
5 ELSE
Display the ETA CTS D of either the cursor (if MANL) or the current way-point on both lines of the display.
6 Branch to don't serve DSP MODE NTL
7 LAT LONG
Display the latitude and longitude of either the current way point (if OPR FUNC=DEST), the cursor (if OPR FUNC=MANL) or the present position on both display lines
8
9 Branch to don't serve DSP MODE NTL
10 SET DRIFT
Display the set and drift on line 2 of the display
11
12
13
OUTPUT CONDITIONS:
A

Fig. 71.

TASK:

SECTION: Main
SUBSECTION: Output
LABEL: DISPLAY

REQUIREMENTS:

INPUT CONDITIONS:

1	DIR SPD	Display either the direction and speed over ground (if OPR MODE=LORAN) or the heading and speed		
2		through the water (if OPR MODE=DR) on line 2		
3	CASE of DSP MODE NTL			
4	GRI	blank line 1		
5	TIME	OPR FUNC= DEST or MANL	Display the CTS D to current way point (if DEST) or cursor (if MANL) on line 1	
6		ELSE	Display the current local time on line 1	
7	LAT LONG	blank line 1		
8	SET DRIFT	Display set and drift on line 1		
9	DIR SPEED	OPR MODE=LORAN and DSP MODE LST ≠ DIR SPD	Display vessel direction and speed over ground on line 1	
10		ELSE	Display vessel Heading and speed trough water on line 1	
11				
12				
13				

A

OUTPUT CONDITIONS: Display holds basic display message

Fig. 72.

SECTION: Main
SUBSECTION: Loran
LABEL: LRN FIX

TASK: Take the most likely root of the TDLL fix (based on present position computed from dead reckoning) and compute SET and DRIFT and speed over ground

REQUIREMENTS: NONE

INPUT CONDITIONS: Loran triad selected, TD's gotten

1	Present Position (PP) known	Get fix1 based on current root selected				LRN TDLL
2		Dist. from PP to fix1 > 165 NM	Select alternate root and get fix2			LRN TDLL
3			Dist. from PP to fix2 > 1650 NM	Dist. from PP to fix2 > Dist. from PP to fix1	Use fix1 as PP	
4						
5				ELSE	Use fix2 as PP	
6			ELSE	Use fix2 as PP		
7		ELSE	Use fix1 as PP			
8	ELSE	Get fix1 based on currently selected root				LRN TDLL
9		Dist. from fix1 to center of Loran chain > 1200 NM	Select alternate root and get fix2			LRN TDLL
10			Dist. from fix2 to center of Loran chain > Dist. from fix1 to center of Loran chain	Use fix1 as PP		
11						
12						
13			ELSE	Use fix2 as PP		

OUTPUT CONDITIONS:

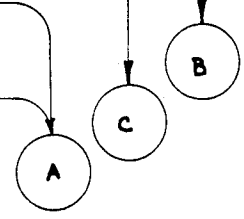

Fig. 73.

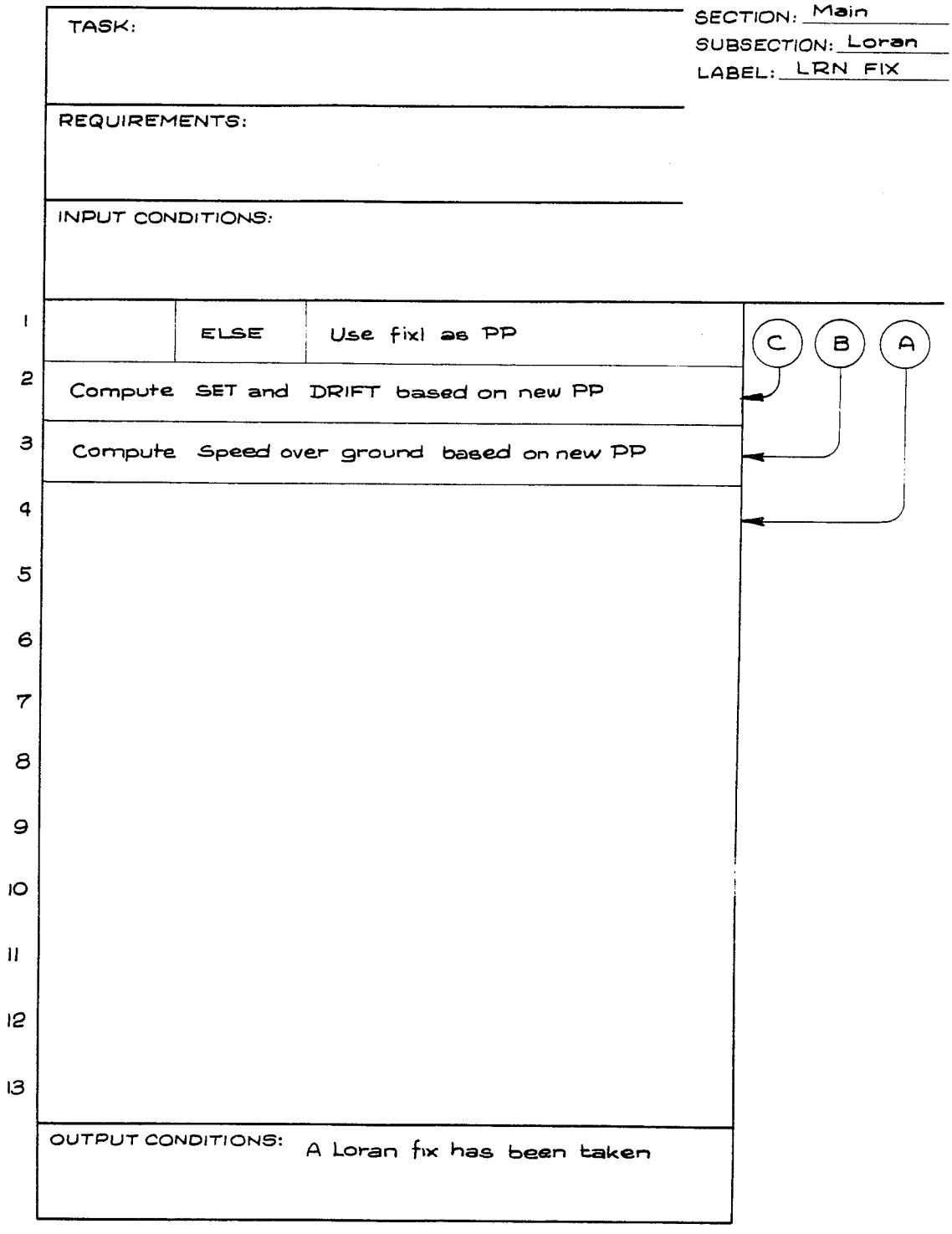
TASK:
SECTION: Main
SUBSECTION: Loran
LABEL: LRN FIX
REQUIREMENTS:
INPUT CONDITIONS:
1
ELSE
Use fixl as PP
C
B
A
2
Compute SET and DRIFT based on new PP
3
Compute Speed over ground based on new PP
4
5
6
7
8
9
10
11
12
13
OUTPUT CONDITIONS: A Loran fix has been taken

HIGH-ACCURACY NAVIGATING APPARATUS WITH STEP-DRIVEN PROJECTED CHART

BACKGROUND

1. Field of the Invention

This invention relates generally to instruments for use in navigating, and more particularly to automatic devices for determining and pictorially displaying the position and related dynamic parameters of a traveling craft—and for guiding or helping to guide such a craft upon a straight track to desired destinations or way points, practically independent of current.

2. Prior Art

One of the earliest sophisticated systems for automatically producing a pictorial representation of craft position is disclosed in U.S. Pat. No. 1,701,582 to Georges Mengden. Mengden's paper map was presented directly in a movable case, with a wind-up mechanism for strip maps covering the anticipated terrain of a long journey. Input information was derived by cable drives from a compass repeater and from a speed sensor—namely, a ship's "speed log" in the case of a water craft, anemometer in the case of an airplane, or odometer in the case of a land vehicle.

Mengden relied upon an ingenious mechanical system—a rubber ball suspended between two drive rollers and four driven rollers, with axis of rotation of the drive rollers controlled by the compass repeater—to resolve the scaled-down craft motion into cartesian components to drive the map in the "up and down" and "side to side" directions respectively. For water and air craft Mengden provided drift correction in the form of a duplicate motion-resolving system, complete with six rollers and rubber ball, in which the drive rollers were oriented and motor-driven at appropriate angle and velocity to approximate the known set and drift of the medium through which the craft was moving. These parameters of course had to be determined or estimated by the operator and set up at the controls of the device.

Such analog mechanical systems received extensive elaboration. U.S. Pat. No. 3,160,851 to Karel Ramsayer was addressed to the problem of limited area coverage of maps in devices such as Mengden's, and the inherent difficulty of using strip maps of a preselected itinerary for general navigation. Thus Ramsayer's device "presupposes the employment of a navigation computer delivering the map track components as the angle of rotation of two output shafts (see e.g. W. H. Coulthard: Aircraft Instrument Design, p. 163, Sir Isaac Pitman and Sons, Ltd., London." Ramsayer prepared multiple map strips, covering adjacent portions of a conventionally shaped navigational chart, but with overlap areas along both edges. Such strips he connected end-to-end to make a roll, and the roll was mounted on and driven by platens within his mechanism.

Ramsayer's platen drive mechanism responded to two different kinds of situations: (1) it operated at speed proportional to north-south components of craft motion, to reproduce such components as motion of the map strip past a horizontal hairline; (2) it stepped from one strip to the next, at a rapid slewing rate, to accommodate motion of the craft past the left- or right-hand (that is to say, western or eastern) edges of a particular map strip. Meanwhile a traveling spot of light (or a traveling pen) operated from left to right to pinpoint the present east-west position of the craft on the map strip currently displayed. An analog electronic limit system

used master and slave potentiometers, and/or stepping switches with fixed resistances, to respond to motion of the light spot or pen into the overlap areas along the edges, by initiating a map-strip change to keep the right map sections on display.

To minimize the problem of continuous map shifts when the craft moved in a meandering course that generally followed the edge of the displayed region, the permissible incursion of light spot or pen into the map overlap areas was adjustable. A small-scale map was interspersed into the roll of strip maps every so many panels, to permit the navigator to readily call up a view of a larger area; when these particular map strips were displayed the apparatus automatically switched-in a correspondingly different set of scale-determining potentiometers.

While Ramsayer directed his efforts to minimizing the problems of navigators whose craft were to range over a wide area along unpredicted routes, others addressed the opposite problem of the relatively small scale available when using even large-scale maps, in systems such as Mengden's and Ramsayer's. U.S. Pat. No. 3,725,919 to Jerry Jones reflects such a concern, in the context of a pipelaying barge, whose mission includes adhering as closely as possible (in the range of feet or yards) to a preselected route, and producing a precise record (in the range of feet or yards) of the deviation from that route, for future purposes of pipeline maintenance.

Since the preselected route is not generally straight north-and-south, the Ramsayer system is not readily adapted to provide very high-resolution display of such a route, and in the Ramsayer system the resultant record would in general consist of pen markings spanning several map strips. Worse yet, since the preselected route is not generally straight at all, even a strip map specially prepared to show the route would have to be wide enough to accommodate the entire curvature of the route and thus would be severely limited in resolution. Jones' solution to this problem was to dissect the course into plural segments, each at least nearly rectilinear, and to lay out each segment of the course along the center of a long, narrow chart segment. Jones' chart strips, unlike Mengden's and Ramsayer's, were not aligned north-and-south (i.e., parallel to meridians), but rather each employed grid bearings different, in general, from those of the previous or subsequent segment.

Jones' system is more modern than Ramsayer's in that Jones employs a radio ranging system—two shore-based transponders interacting with a shipboard transceiver/computer unit—and also in that Jones uses a general-purpose digital computer (such as the Hewlett Packard Model No. 2115A) to determine the coordinates of the barge position, and from these coordinates then to generate control signals for stepping motors that drive the chart platen and pen. Jones' system, however, is limited to the presentation of position on specially prepared paper maps. It is further limited by the use of a general-purpose computer, complete with peripheral devices (card, tape, or the like). It thus by size, power requirements, and necessary operating skill is unsuited for operation in general navigation by nontechnically trained personnel aboard small craft. Moreover, by its use of a single computer for all functions, it requires a computer of unnecessarily great computing capability and therefore inappropriately high price.

Perhaps the most striking limitation of Jones' system is its restriction to near-shore areas, a restriction that arises from its dependence upon dedicated shore-based transponders. The Jones system, however, also has a less apparent limitation in that it is not designed to make or use dead-reckoning calculations. Although it is perhaps conventional wisdom to think of radio-fix technology as more sophisticated, more powerful and more modern than dead-reckoning technology, there is—as will be explained below—a generally unrecognized advantage that accrues from combining the two capabilities in a single navigating instrument.

Many inventions have been directed to minimizing the various difficulties of map handling and display for different applications. For instance, U.S. Pat. No. 3,299,539 to H. Leiber employs a "lost motion" effect to avoid the problem of repetitive map exchange when a craft wanders back and forth along the edge of one map. U.S. Pat. No. 2,857,234 to T. Murray discloses a plurality of maps, showing either nested areas at different scales or adjacent areas. Each map has its own indicating or recording apparatus. With this system there is relatively less delay and confusion when the indicator leaves one map and the motion continues to be indicated on another, but the additional equipment complexity and space requirements are obviously acceptable only in unusual situations.

Perhaps the most elaborate effort at solution is the closed-circuit television approach typified by U.S. Pat. No. 2,836,816 to J. Allison. An "optical computer" and amplifying components are located in a part of an aircraft remote from the cockpit, but are linked by closed-circuit television transmission to an optical display at a small cathode-ray tube in the cockpit. The automatic remote equipment comprises a reel of charts on motion-picture film, with automatic selection of frames and analog "computer" equipment for determining position and applying automatic correction for the earth's curvature.

Some workers have hit upon the idea of using a film transparency chart directly in a display unit, in the wheelhouse or cockpit, with a relatively small portion of the total transparency projected on a screen for viewing. The reported applications of this idea, however, have not been adapted for practical use in general navigation of medium-small civilian craft. For example, U.S. Pat. No. 2,814,199 to A. Waldorf discloses an air navigation system in which a strip map is projected onto a screen for comparison with a radar or optical image of nearby terrain. The navigator adjusts the equipment to bring the two superimposed images into alignment, thereby permitting both altitude determination and determination of map location. Besides requiring relatively sophisticated users and an elaborate dual display system, this system may be of marginal usefulness over open sea, or in any area where landmarks producing distinct radar images are absent.

While Waldorf's system relies upon the human operator to interpret radio signals in terms of a projected map, others have attempted to automate this interpretation and matching function. U.S. Pat. No. 3,475,754 to Royal Scovill discloses a projected-map system that relies upon two omni-bearing receivers to automatically position the map relative to the projection system. Scovill's device finds position relative to two omni-bearing transmitters of known location, by independent operation of two omni-bearing receivers, and in effect locates the craft at the intersection of two bearing lines from the two known station locations. In an alternative operating mode, Scovill's device finds position relative to one omni-bearing transmitter at a known location, by independent operation of one omni-bearing receiver in conjunction with a distance-measuring equipment receiver—thus in effect locating the craft at the intersection of a bearing line and a distance circle from the same station.

Scovill's analog system "duplicates in miniature the space relationship of the radio navigation aids, simulated by [omni-bearing] locator discs, and the vehicle, simulated by one follower related to each locator disc. . . . The instantaneous intersection of the bearing lines from the two reference omni radio stations in the simulation is sought out by [servo-controlled mechanical] followers mounted on the film carriage. Thus . . . the film is continuously driven to project the location of the vehicle at the center mark of the screen." A similar operation occurs in the mode that combines distance measurement with one bearing measurement.

Scovill's apparatus is subject to several sources of very large imprecision and inaccuracy. First, the omni-bearing signals are themselves unreliable. The bearings found in dependence upon these signals are often indeterminate to any better than plus or minus fifteen degrees—due to diffusion of the radiated field pattern by atmospheric diffraction, multiply reflection at topographic features or large buildings, and scattering from a great variety of objects (including other craft). All of these distortions are variable, in dependence upon numerous unknown factors, thus precluding meaningful efforts to compensate by showing the direction and magnitude of distortion on standard charts. The intersection of two such highly inaccurate and imprecise bearing fixes is of course little more than a stab in the dark at a very large area on the charts; yet the Scovill device would yield a deceptively authoritative-seeming map position.

Second, the interpretive electronics of the Scovill system operate entirely on an analog basis, and so are subject to variable and unknown imprecisions and nonlinearities (inaccuracies) that are not reproduced in the charts. Moreover, the charts themselves are normally Mercator, Lambert, or other projects, constructed on the basis of earth-surface dimensions as convoluted with a mathematical function of latitude. Scovill mentions (at his FIG. **13** and columns **36** through **38**) applying a compensation for chart curvature due to the Lambert projection, but does not actually disclose how this might be accomplished.

Assuming that he has in mind compatible electronic systems—namely, analog systems, perhaps involving nonlinearly wound slidewires or the like—it will be apparent that such systems will be relatively inaccurate, besides being cumbersome and expensive. Moreover, since Scovill's system operates on an analog basis, overall, it would be necessary to adjust the Lambert compensators for known latitude. Yet the operator of the Scovill system presumably is reliant upon the Scovill system to determine latitude, so it would appear that some iterative operations by the operator are required to bring the system into even approximately Lambert-corrected balance.

This subject leads to a third major source of difficulty with operation of the Scovill unit, namely, the fact that latitude and longitude apparently are derived from the chart markings as a result of the readout process. This is a serious limitation, for it implies that only when the

chart transport mechanism and the projection system are both operational can the operator obtain latitude and longitude readings. When any part of those subsystems is turned off, malfunctioning, or in a transitional condition (e.g., during an automatic change of charts), no latitude and longitude readings are available.

Although there is some indication in the Scovill disclosure that a separate display of latitude and longitude may be provided by counters gear-driven from the transport servomechanism, it would appear that even these counters would require at least a fully operational (and nontransitional) transport servo for operation. Further, the latitude and longitude outputs would be disabled whenever the transport was used for another purpose-such as to manually control the chart display to make preliminary observations of a portion of the charts other than that in which the craft is currently located, or to examine reference data tabulated on other frames in Scovill's film magazine. Similar limitations may be found in Scovill's provision of displayed heading and speed of craft, and bearing and distance to navigation station, way station, or destination.

Finally, Scovill's unit—like the systems of Waldorf, Jones, and others who disclose radio-fix systems—does not appear to make any provision for incorporation of dead-reckoning computation. As previously noted, this limitation forecloses enjoyment of a particularly useful mode of operation. Scovill's disclosure indicates the unfortunate consequences of this limitation, when he describes (at his column 22) the connection of his navigating device to control an autopilot: "The signals thus made available will indicate left or right off course movement of the aircraft with respect to a fixed course on the bearing line indicated to the way station or destination point with no further adjustment of bearing indication."

The Scovill system may "indicate" off-course movement, but can do so only through continued observation by the operator, who is thus implicitly placed back in the control loop, like the operator of Waldorf's system. Scovill's apparatus apparently does not read out, use, or determine the magnitude of the heading error. As will be seen, the present invention obviates this limitation.

Other radio navigation systems that are in regular use include Loran (long-range navigation) and—in short-range air navigation—two-station DME (distance-measuring equipment, similar to the single unit employed by Scovill's alternative system). Most use that is made of these navigational aids involves manual plotting of position on paper charts. Loran, for example, involves a sizable number of publicly operated radio transmitters, broadcasting position-fix signals that are separated from one another by certain time differences. Specialized receivers are used that are capable of receiving three or four such signals, comparing two of them to obtain one received time difference, and comparing another two of the signals to obtain a second received time difference.

A navigator reads these two received time-difference values from his radio equipment, and he refers to specially prepared charts on which lines of constant Loran time difference appear. By visual interpolation on his charts the navigator finds his present position as the intersection of two time-difference lines. Unfortunately, compounding the delay and inaccuracy in such plotting and interpolation, substantial inaccuracies in the charted Loran time-difference lines have been reported. Even though the Loran radio signals (and the known positions of the Loran transmitters) provide adequate information to calculate latitude and longitude directly, such calculation is generally beyond the ability of small-craft navigators, and commercially available equipment, at least, does not provide such direct readout. The charted time-difference lines offer no suggestion that correction may be required, and certainly do not hint what the direction or magnitude of such correction should be.

Two-station DME fixes are considerably more straightforward and sometimes more accurate, though they too require manual plotting on a chart. The area coverage of the DME transmitter system, however, is not as extensive as might be desired. As with Loran, the DME devices do not read out latitude and longitude directly; such position coordinates may be obtained only through the added step of manual plotting on a chart, and then reading the latitude and longitude from the chart itself.

Even these plotting procedures leave yet additional effort to be expended if the navigator wishes to compute a "course to steer." This effort may be particularly complex on long trips, for which apparently straight lines on the charts are not really straight; rhumb-line corrections are required. Moreover, even when the navigator has set his course, vigilance is required to avoid missing his destination because of motion of the medium through which his craft is moving—that is, in maritime parlance, "set and drift."

It goes without saying that each of these navigating systems serves a good purpose, within its limitation. These systems are the best that have been available—clearly far beyond the capabilities of primitive navigating systems of only fifty years ago. It is not the pupose of the foregoing comments to derogate these systems, but only to indicate certain particulars in which the present invention is believed to improve upon them.

SUMMARY OF THE INVENTION

The present invention has among its objects (1) the provision of a map display that is quite high-resolution—in other words, a display that is capable of showing craft position precisely on a large-scale chart—and yet that covers a relatively large area without change of chart; (2) the provision of direct readout of position coordinates even when the chart display or positioning mechanism is disabled, turned off, or in some transitional condition; (3) the provision of position fixes that are independent of imprecisions or nonlinearities caused by omnibearing signal ambiguities, analog signal-processing idiosyncrasies, chart curvatures, erroneous charting of radio-beacon (Loran) time differences, and the tedium and inaccuracies of manual plotting; and (4) the provision of a single instrument that is capable of both displaying and setting a "course to steer" that is automatically compensated for set and drift.

In accordance with one aspect of the present invention, a transport mechanism receives an optically projectable map, and controllably effects relative movement between the map and an optical projection system in accordance with the transport control signals applied to the transport mechanism. The map includes a scaled representation of a geographical area and at least one calibration indicium at a position on the map corresponding to predetermined known coordinates. Calibration input signals indicative of the known coordinates are generated, and the known coordinates are coordinated with the position of the transport mechanism

associated with the map calibration indicia. Indicia of the present geographic position of the craft is stored, and thereafter updated in accordance with data input signals indicative of either craft movement or craft geographic position. Transport control signals are generated in accordance with the updated stored position to vary the map position relative to the projective means in accordance with the instantaneous position of the craft.

In accordance with another aspect of the invention, a mechanism is provided for selectively generating transport control signals to effect relative movement between the map and projection system until the map assumes a position corresponding to a desired geographical point represented on the map, and the coordinates of the desired geographic point are calculated from the transport control signals. A course to steer is then generated from the craft present position and coordinates of the desired point. Signals indicative of the course to steer can then, if desired, be applied to an autopilot.

In accordance with a further aspect of the invention, the optically projectable map is formed of a high resolution film transparency. At least one pair of calibration indicia are provided at diagonal corners of the transparency. The film transparency is received between first and second outer frame panels of a film mount. Each of the panels includes a cut-out portion and a recessed portion about the periphery of the cut-out. A glass sheet is received in the recessed portion, and a plurality of projecting pins are disposed to align the film transparency in the cut-out portion so that it is viewable through the glass sheets. A plurality of bores are disposed to receive the projecting pins from the other panels. A closure mechanism effects a secure coupling between the respective panels.

BRIEF DESCRIPTION OF THE DRAWING

A preferred exemplary embodiment will hereinafter be described in conjunction with the appended drawing, wherein like numerals denote like elements and:

FIG. **1** is a perspective view illustrating generally a preferred embodiment of the present invention completely assembled, and showing particularly the case exterior, control panel, viewing screen, and map access slot;

FIG. **2** is an enlarged, straight-on view of the control panel of the FIG. **1** embodiment, showing particularly the separate display mentioned earlier, and the keyboard;

FIG. **3** is a perspective view of the interior of the FIG. **1** apparatus, showing generally the location and arrangement of its various subsystems;

FIG. **4** is a perspective representation of the optical system of the FIG. **1** apparatus;

FIG. **5** is a perspective view, partly cut away, showing the map transport mechanism of the FIG. **1** embodiment, viewed from a forty-five degree angle to the vertical (so that the up-and-down tracks of the mechanism appear to be standing vertically while actually being inclined at an angle of approximately forty-five degrees);

FIG. **6** is an elevation, partly in section and taken along line **6**—**6** of FIG. **3**, of a focusing mechanism used in the FIG. **1** embodiment;

FIG. **7** is an elevation, partly in section and taken along line **7**—**7** of FIG. **3**, of a small "folding mirror" alignment mechanism used in the FIG. **1** embodiment;

FIG. **8** is an exploded perspective view of a film mount used to retain and protect a film-transparency map, in conjunction with the apparatus of FIGS. **1** through **7**, also showing—partly in phantom line—the map itself;

FIG. **9** is a section view, partly broken away, of the film mount and map of FIG. **8** as assembled for use;

FIG. **10** is a block diagram of the electronic system of the embodiment shown in FIGS. **1** through **5**;

FIGS. **11A** and **11B** are a schematic block diagram of the keyboard module of FIG. **10**;

FIGS. **12A–12D** are a schematic block diagram of the display module of FIG. **10**;

FIGS. **13A–13J** are a schematic block diagram of the slave processor module of FIG. **10**;

FIGS. **14A–14H** are a schematic block diagram of the Loran interface of FIG. **10**;

FIG. **15** is a schematic block diagram of the personality module of FIG. **10**;

FIGS. **16A–16H** are a schematic block diagram of the input/output module of FIG. **10**;

FIG. **17A–17D** are a schematic block diagram of the bus module of FIG. **10**;

FIGS. **18A–18M** are a schematic block diagram of the master processor module of FIG. **10**;

FIG. **19** is a schematic block diagram of the power control and monitoring module of FIG. **10**;

FIGS. **20–23** are simplified diagrams of craft location and dynamics, illustrating use of the embodiment of FIGS. **1** through **19** in certain practical navigating situations;

FIG. **24** is a "memory map" diagram, showing allocation of data to various memory components in the preferred embodiment of FIGS. **1** through **19**;

FIGS. **25–28** are diagrams defining terms in the mathematical equations that must be solved by the computer to perform its assigned navigating tasks;

FIGS. **29** and **30** are format samples, explaining the format of the Chapin diagrams that make up all the remaining drawings;

FIGS. **31** et seq. are Chapin diagrams showing the structure of the programming for the four microprocessors in the electronic system of FIGS. **1** through **19** and **24**, as follows:

FIGS. **31** through **42**—map transport-mechanism "slave processor" in FIG. **13A**;

FIGS. **43** through **49**—calendar-clock and input-sensor "slave processor" in FIG. **13A**;

FIGS. **50** through **55**—Loran Interface "slave processor" in FIG. **14**;

FIGS. **56** through **73**—central processor unit in FIG. **18A**.

DETAILED DESCRIPTION OF A PREFERRED EXEMPLARY EMBODIMENT

In a preferred embodiment of the invention as here disclosed, a self-contained instrument apparatus is provided for use aboard a craft—i.e., a water craft such as a ship or large boat, or an aircraft such as an airplane, or a land vehicle such as a military tank. The preferred embodiment, as here described, is particularly adapted for maritime applications; however, it is to be understood that the same device with minor modifications (primarily in the types of speed and heading sensors and radio receivers employed) is useful in air or land applications.

The apparatus is particularly useful for use aboard a craft that is adapted for widely ranging motion—that is,

one that has the capability of significantly changing its own position with respect to latitude and longitude or other earth-surface position coordinates.

The apparatus is designed to accept a miniaturized optically projectable map (or "chart") of portions of the earth's surface to be traversed by the craft, including particular fixed points of interest such as origin, destination, and way stations. The map also, of course, includes what may be defined here as points of interest that are variable—the craft's present (or "instantaneous") position. The map is advantageously a projection transparency on high-resolution film.

The apparatus includes a carriage for receiving and movably supporting such maps. When a map is supported in the carriage, the apparatus displays selected portions of the map for viewing by a human operator. The display is accomplished by provision of an optical projection screen, and an optical projection system for projecting an image of those selected portions of the map onto the screen.

The screen is provided with a position-marking indicium that is fixed with respect to the screen. Such an indicium may be simply a crosshair-type marking that is engraved, painted, or otherwise marked directly on the surface of the screen; or it may be provided in the form of a pointer or crosshairs adjacent the screen, or an image projected onto the screen; or it may be provided in any other suitable manner.

The apparatus of the preferred embodiment that is here disclosed also includes a transport mechanism for moving the map carriage relative to the projection system. This transport mechanism is powered by a precision stepping drive, which is in turn controlled in such a way as to selectively move particular displayed points of interest on the map (and especially the dynamically variable point of interest that is the craft's current position) into alignment with the indicium mentioned above. When this is done, of course, areas of the map surrounding the point of interest are thereby incidentally "selected" for display on the screen.

Furthermore, the apparatus of the disclosed preferred embodiment includes a dedicated digital electronic computer that is adapted and programmed to perform several functions:

1. reception and storage of data relating to the map, and relating to the various kinds of "particular points of interest" mentioned earlier, and also relating to the craft's motion relative to earth-surface position coordinates.

2. reception from the human operator of information signifying the operator's selection of a single point of interest for alignment with the indicium;

3. computation of earth-surface position coordinates for particular points of interest, subject of course to the accuracy of the data received;

4. computation of a position for the transport mechanism at which the displayed single point of interest selected by the operator is aligned with the screen indicium; and

5. generation, and direction to the transport mechanism, of stepping control signals to cause the transport mechanism to move to the position computed in point **4** above.

As to selection of a single point of interest for alignment with the crosshairs or other indicium (point 2 above), it should be explained that the operator's most obvious choice will normally be the craft's present position; however, that is not the only particular point of interest which the operator may wish to select during routine operation. In particular, the operator may wish to operate the mechanism so as to place his destination point, or any one of several way stations, or in some cases the known location of a radio beacon, at the crosshairs.

These choices may arise because the apparatus has the capability of automatically deriving the position coordinates of one of these locations from having them placed at the crosshairs, so that the operator does not have to manually key in such position coordinates. Alternatively, the operator may simply wish to move such other points of interest onto the screen—and perhaps near the crosshairs—merely to examine the chart in the area of the point of interest.

As to computing earth-surface position (point **3** above), the computer may compute position coordinates (e.g., latitude and longitude) in a great variety of ways and for various purposes. In particular it is capable of computing position coordinates by dead reckoning from an initial set of coordinates. It may also compute position coordinates by (1) receiving time-difference signals from an external Loran receiver, through an electronic interface internal to the apparatus of the present invention, and (2) calculating the position coordinates that geometrically must correspond to the combination of time-difference signals received.

Similarly the apparatus may derive position coordinates using data either manually entered or (with suitable interfacing) automatically received from certain radar units, or in aerial navigation from certain DME receivers, or even (though at the cost of incurring considerable inaccuracy) from "radio direction-finder" receivers. The term "radio equipment" and like terms as used herein are intended to be understood generically—that is, to encompass all four of these systems that have been mentioned, and any other radio-based systems as well.

One of the most important single aspects of the computation of position coordinates is simply that the calculation is advantageously done directly from data—not derived from the chart position. The chart position, in fact, is best derived from the position coordinates. It will be understood that, while it is preferred to have the apparatus calculate, accept data, and display data in terms of the usual latitude and longitude values, any system of earth-surface position coordinates may be used instead, without departing from the scope of the present invention.

It is also of particular importance that the apparatus is capable of obtaining position coordinates either from radio fixes or through dead reckoning because one of the most useful modes of operating the apparatus is to use both these computational modes simultaneously. By comparing the results of the two computations over a period of time, the apparatus is able to measure with reasonable accuracy the discrepancy between the craft's course as steered and the craft's course as actually "made good" over the bottom (in the case of ships or boats) or the earth's surface (in the case of airplanes and the like).

This discrepancy of course arises primarily because of currents in the water or air (respectively)—what is, for instance, in the maritime field referred to as "set and drift" of the water. Such currents are often relatively uniform over fairly broad areas; consequently, knowing the set and drift permits automatic compensation of the

steered course so that the course "made good" is the actual desired course to a destination or way station.

A similar but only semiautomatic set-and-drift compensation is advantageously provided, if automatically interfaced radio navigational-aid equipment is unavailable, by periodically comparing dead-reckoning calculations with manually taken bearing fixes. This system performs all of the necessary calculations automatically, but is less convenient than the radio-fix system, due to the necessity of manually taking frequent bearing fixes to obtain reliable set-and-drift data.

Although a great deal more will be disclosed about the calculations to be performed by the computer, at this point it will be helpful to understand preliminarily that the computer may also generate signals for operating an autopilot, and in particular for setting a course automatically. By making simultaneous dead-reckoning and radio-fix position determinations, and compensating the "course to steer" based on the discrepancy to allow for set and drift, the apparatus is capable of directing an autopilot to steer straight for a destination or way station, without the kind of intervention by the operator (navigator, pilot) required by the Scovill apparatus discussed earlier. Many of the advantages of the present invention may be characterized as improvements in operational convenience, or in measurement precision and accuracy. The operation just described, however, is a qualitatively new capability.

As to control of the transport mechanism (point 5 above), it has been found that all of this function is best performed by a separate subunit within the computer—that is to say, a separate dedicated microprocessor that relieves the master processor in the computer of the necessity to time-share these relatively lower-level functions. This system is more economical because the master processor must be capable of relatively sophisticated operations, and a great deal of this expensive capability is wasted on relatively rote operations—in addition to unduly complicating the programming—unless these lower-level or rote functions are split off for separate performance.

A similar division of work is advantageous for certain of the data mentioned in respect of and storage of extrinsic data (point 1 above)—in particular, the reception of data relating to the craft's position when these data are input from automatic sensors such as compass and ship's log. A microprocessor dedicated to these peripheral translation and traffic tasks can also advantageously be assigned the chore of reading and interpreting a solid-state digital "calendar clock" that is internal to the apparatus.

These specializations have been found to permit use of a smaller master processor, with simpler programming, while at the same time allowing the processor to accept quite complex and sophisticated mathematical and coordination assignments that significantly enhance the overall capability and utility of the apparatus.

At any rate, the five computer functions mentioned above combine to automatically and continuously hold the displayed single point of interest selected by the operator at the fixed crosshairs or other indicium on the screen, even if that point of interest is the craft's variable position.

As previously suggested, the apparatus is adapted and programmed to receive at least some of its data and instructions through manual entry by the operator. For this purpose the apparatus includes a specialized keyboard for manual entry of numerical data. The keyboard also permits for manual direction of the map transport mechanism—to slew the mechanism to any desired position, to display any mapped point of interest on the screen or, if desired, at the crosshairs. A key on the keyboard is provided for signifying to the apparatus that the point on the map that is currently aligned with the crosshairs is in fact a particular point of interest.

It is also desirable to provide a separate display system, apart from the projection screen, for verifying the operator's numerical entries and for otherwise communicating with the operator. The display, ideally a low-power unit such as a bank of light-emitting diodes (LEDs), may be used to present numerical values of position coordinates to the operator, with or without Loran time-difference values, and whether calculated by dead reckoning or radio fix.

Because position coordinates are found directly, not from the chart position, they can be shown at the low-power display even when the projection system and map transport are (1) turned off or (2) in use for loading a chart or examining a portion of the chart far from the craft's present position. The display also is useful to inform the operator of a calculated "course to steer," either corrected or uncorrected for set and drift as previously suggested. The display may also be used to prompt the operator as to information that is to be entered or operations that are to be performed.

By means of the division of labor within the dedicated computer's subunits as mentioned earlier, it is possible economically to provide programming and memory capacity to apply corrections for magnetic deviation and variation errors that would otherwise interfere with accuracy of bearings and headings taken from a craft's magnetic compass. The computer also is programmed to compute and display distance to—and estimated arrival time for—destination or way stations, a further convenience to the operator.

The computer is further programmed to select combinations of Loran transmissions from the several that are available in certain geographic areas, to make use of those pairs of transmissions that yield the best position-fix accuracy. This selection can be of great benefit since in some particular areas the relative locations of some of the available Loran transmitters—although the transmitters are nearby and very powerful—gives certain combinations extremely unfavorable geometry for accurate fixes. This problem is sometimes referred to as the "Loran baseline extension" problem; it is virtually eliminated as a source of inaccuracy by the preferred embodiment here disclosed.

The preferred embodiment herein disclosed is also compatible with separate digital printers or "x-y" plotters, to make a permanent record of various characteristics of a craft's operation.

1. EXTERNAL FEATURES

Referring now to FIG. **1**, a system in accordance with the present invention is suitably enclosed in a case consisting of a lower section **10**; a forward section **11**, permanently secured to lower section **10**; and an upper section **12**, removably fitted to the lower and forward sections **10** and **11**.

Lower section **10** supports most of the hardware within the case. The forward section **10** provides a conveniently sloping control panel **14**, a rear-illuminated projection screen **15**, and a bezel or shade **18** to enhance daytime viewing. The projection screen advantageously bears an engraved or silk-screened cen-

tral crosshair-type indicium **16** and a likewise engraved or silk-screened compass rose **17**. Both these features may be provided as pointers or otherwise separately from the screen if desired. Forward section **10** also carries a focusing control **72** and an alignment control **112**.

Upper section **12** is formed with an access slot **13** for insertion and removal of map **21**, which is in the form of a full-color projection transparency on special microfiche-quality (that is to say, extremely high-resolution) photographic film. The chart or map **21** is enclosed in a special film mount **22**, adapted to be manually inserted along a line of motion **22'** through slot **13** and into a map carriage within the upper case section **12**. When map **21** is properly inserted (and when the apparatus is connected to draw electrical power from the craft's power system and is turned on), suitable manipulation of the keys at the control panel **14** produces on the screen **15** a projected image **21P** of a small portion (approximately five percent of the linear dimension) of map **21**.

FIG. **2** shows the details of control panel **14**, namely, a pair of twelve-character light-emitting-diode displays **31** and thirty-three control keys, here identified by reference numerals **32** through **52**. Key **32** carries in its upper left-hand corner a small indicator light **32'**, furnished as a light-emitting diode. For simplicity of discussion, this description refers to the key **32** as the "DIR/SPEED key," and to the indicator light **32'** as the "DIR/SPEED light." Each of the other keys **33** through **52** likewise carries a small indicator light in the upper left-hand corner. To avoid cluttering the drawing in FIG. **2**, these lights are not identified with reference numerals, but it is to be understood that, for example, the "W light" refers to the indicator light in the upper left-hand corner of the "W key" **43**.

It is helpful in understanding the apparatus to think of it as having a hierarchy of capabilities—"modes" of operation, and within each of the modes a variety of possible "functions." Some of the functions are unique to particular modes, or used in unique ways in particular modes; others are not. The three primary modes—dead-reckoning, bearing-fix, and Loran—are initiated by use of keys **45**, **46** and **47** near the bottom of the control panel. Most of the other keys are used to perform or initiate functions: display, data entry, chart motion, or other operations.

As a general rule, mode operation does not stop when a function is selected and executed. The screen and keyboard display may be in use performing the function and so unavailable to show mode data; however, when performance of the function is complete the apparatus resumes showing current mode data as though no interruption had occurred.

Functions are initiated in two ways. Those that are often used have specific keys for the purpose; these keys and their functions are described immediately below. Those functions used less often are initiated by pressing the "f" (for "function") key **38**, followed by specific other keys—particularly numeric keys **37**; these functions are described in subsection **4** below, "Operation."

Keys **32** through **36** are grouped with the displays **31** in a section of the control panel that is identified (by indicia at the upper left corner of the section) as section "I. DATA DISPLAY". (Legend shown at lower right of section **4**.) When the DIR/SPEED key **32** is touched, one of the two displays **31** indicates values of the craft's direction and speed, as computed within the apparatus—or as entered by the operator at the control panel. When the apparatus is performing a function that involves entry of data, the displays **31** "prompt" the operator by displaying questions to guide him or her in operating the equipment. This prompting makes it unnecessary to memorize complex sequences of operations. Further, a "prompter" character (*) is shown to indicate character positions that are ready to accept data. All required data characters have been entered when the prompter no longer appears in the display. This assures correct format for use in the computer—for example, entry of the zeroes and decimal point in "041 27.50 W," for forty-one degrees, twenty-seven and a half minutes west longitude, rather than "41 275 W." (Operating procedures are detailed in subsection **4**, below, of this Detailed Description.)

When the SET/DRIFT key **33** is touched, the two displays **31** respectively indicate values of the set (that is to say, direction) and drift (velocity) of currents in the body of water (or, in aeronautical applications, in the air) through which the craft is moving. These values may be as computed within the apparatus or as entered by the operator at the control panel.

Similarly, touching the LAT/LONG key **34** causes the displays **31** to indicate respectively latitude and longitude, either calculated or entered. The values so indicated may represent position coordinates for a destination (or one of several way stations, which are for this purpose regarded as destinations), or for the craft's present position, or for a bearing point (to be explained shortly). The "f" key **38**, DEST/PP key **48**, and BRG FIX key **45** are used (as described below) to indicate which of these interpretations is to be applied to the indicated position coordinates.

Likewise, touching the GRI/TD key **35** causes the displays **31** to indicate respectively certain parameters related to the "Loran" ("long-range aid to navigation") system. The upper display reads the "group repetition interval" (GRI) for the craft's present operating area. This parameter simply represents a constant value that is characteristic of the Loran transmissions for the particular geographic area, and that must be supplied to the apparatus in order for it to properly decode the information from the Loran receiver. The lower display indicates two "time differences" (TDs) that are received from the Loran receiver, related to the selected GRI.

Some Loran receivers provide up to five TDs; the apparatus of the present invention automatically selects the two TDs that yield a position fix of greatest accuracy, and indicates only those two. Like position coordinates, the GRI and TDs displayed may be for a destination, present position, or bearing point, depending upon the implication selected by the "f," DEST/PP, and BRG FIX keys **38**, **48** and **45**.

Touching the TIME/CTS/D key **36** causes one of the displays **31** to indicate the date, time, and time zone for the craft's present location. If the DEST/PP key **48** is touched just before or after the TIME/CTS/D key, one of the displays gives the same group of data for the next way station or destination. In addition, if the apparatus has been provided or has calculated adequate data regarding speed and location, one of the displays **31** will shift from indication of local data, time and zone to indication of a "course to steer" to make good the planned itinerary, and the distance to the next way station or destination.

Keys **37** to **42** are identified by indicia on the control panel as "II. DATA ENTRY" keys. The numeral and decimal-point keys, indicated generally at **37**, are used for entry of numerical data.

The "f" (function) key **38** may be analogized to the shift key on a typewriter, or more closely to the "2d" key on many calculator keyboards: touching it changes the implication of touching certain other keys on the panel. For example, touching the "f" key and then certain numeral keys causes the apparatus to interpret the numerals not as data but rather as the numbers of certain operations—functions—for which specific, dedicated control keys are not provided. Touching the "f" key **38** and then any of the data display keys **32** through **36** prepares the apparatus to accept and display (rather than calculate and display) the particular type of information indicated by the data-display key used. The many different uses of the "f" key are detailed in subsection **4**, "Operation," below.

The Y/+ key **39** is sometimes used for entry of numerical data—as when it is necessary to indicate that a particular value is positive. This same key **39** is, however, also used in some parts of the operating procedure to respond in the affirmative ("yes") to an inquiry (or "prompting") that is automatically presented at displays **31**. The N/− key **40** is similarly used to indicate negative algebraic sign of a quantity or negative response to a query, depending on the context.

The CLR ("clear") key **41** is used in the customary way to correct an entry that has been begun erroneously. The ENT ("enter") key **42** is used to finalize entry of a parameter or response that has been provisionally entered (or, to put it more conventionally, "keyed but not entered") using keys **37**, **39** and **40**. The ENT key also has certain other uses in special situations to be described later.

Keys **43** and **44**, designated "III. CURSOR" by indicia on the control panel, do not actually move the crosshairs (or "cursor") on the screen, but rather move the map, within the apparatus, relative to the projection system so that the projected image moves with respect to the crosshairs on the screen. For instance, touching the "W" key moves the map image to the right, so that points further toward the west come under the vertical crosshair; touching the "N" key moves the map image downward to bring points further toward the north under the horizontal crosshair; and so forth.

If the operator touches one of the N, S, E and W keys **43** only briefly, the stepping drive system will advance only one step, but if the operator touches the key continuously the drive will advance continuously, at a rapid stepping rate—thus providing both fine adjustment of position and coarse or "slewing" adjustments using only the four keys. The N, S, E and W keys are also used as data-entry keys, to indicate the compass direction when entering latitude and longitude of bearing points, present position, way points, or destination.

Touching the MARK key **44** indicates to the apparatus that the map location that is aligned with the crosshairs, at the time the key is touched, is a destination (or way station), or the craft's present position, or the location of a bearing point (see below)—depending upon use of the "f," DEST/PP, and BRG FIX keys **38**, **48** and **45**. The MARK key also has certain other uses in special situations, to be described shortly.

Keys **45** through **52** are identified by indicia on the panel as "IV. CONTROL KEYS". As mentioned earlier, keys **45–52** select basic operating modes for the instrument. The BRG FIX key **45** alerts the apparatus to receive two kinds of data: (1) numerical entries, or "mark" entries (mentioned just above with regard to the MARK key **44**), specifying the position of a bearing (BRG) point—that is, the position coordinates, or map position as such, of a visible object, radio source (other than loran transmitters, whose locations are stored within the apparatus), or other reference point relative to which bearings are to be taken; and (2) numerical entries for the actual bearing and distance measurements taken from the craft by radar, pelorus, compass, sextant, rangefinder, etc. Operation in the bearing-fix mode is described in detail in subsection 4, below.

The DR TRACK key **46** directs the apparatus to apply dead reckoning (DR) to repetitively calculate and display (using both the projection screen **15** and the displays **31**) the present position of the craft. This calculation is automatically performed once per second based on the most recently furnished heading and speed data—whether from automatic sensors or manual entry—and on the most recently entered or calculated set and drift data.

If automatic speed and heading sensors are not provided, the displays **31** prompt the operator to enter course and speed data manually. If the sensors are provided, the system automatically accommodates magnetic compass deviations and variations, and excessive fluctuations in the signals from either the compass or the speed log, as described below in subsection 4, "Operation."

In this DR mode the instrument will itself calculate set and drift, and compensate for them, if bearing fixes are periodically supplied by the operator to support determination of set and drift from the discrepancy between positions found by fix and by DR.

The LORAN key **47** directs the apparatus to repetitively calculate and display the present position of the craft based on Loran fixes, and to compare the progressive changes in Loran fix with the results of dead reckoning to find current set and drift of the water through which the craft is moving—and from this comparison to determine a set-and-drift-compensated "course to steer" for display and for direction to an autopilot (if available).

In its "normal" condition the apparatus displays calculated position coordinates, or GRI and TDs, or local time and date, for the craft's present position. Likewise, manually entered position coordinates, GRI and TDs, or local time and date, are interpreted as for the craft's present position. Touching the DEST/PP key **48**, however, advises the apparatus to accept and/or display data for the craft's destination (or a way point instead. Touching the "f" key **38** and then the DEST/PP key **48** advises the apparatus to return to its normal condition—accepting and/or displaying data for the present position.

Touching the MANL/LOAD key **49** prepares the unit to accept manual instructions at the N, S, E and W keys **43** for motion of the map image, as mentioned above with regard to those keys. This mode of operation, as distinguished from the bearing-fix mode, or the destination-locating or present-position-locating mode, merely moves the chart for the user's convenience in viewing areas of the chart that are not currently displayed. While such viewing is going on, the basic operating mode of the apparatus that was last previously in progress continues "in the background"—without affecting the chart position. When such manual direction

of the displayed chart has been completed, touching the MARK key **44** returns control of the map position to the automatic operating mode that has continued during viewing, and the map automatically moves to the appropriate present position for that mode.

Touching the "f" key **38** and then the MANL-/LOAD key **49** causes the map carriage within the apparatus to move to a position adjacent the slot **13** (FIG. **1**) in the upper case section **12**, for purposes of changing maps. When a new map is in place, touching the ENT key **42** informs the apparatus that the necessary procedure for accepting a new map is to be begun.

Touching the POWER ON key **51** has the effect of turning the instrument power on or off, depending on whether it is initially off or on respectively. The SCREEN ON key **52** has the same effect fo the projection lamp within the apparatus. During extended times when it is not desired to view the map display of present position, approximately half the operating power for the apparatus can be conserved by operating it with the screen dark.

The small indicator lights in the upper corners of the keys **32** through **52** are automatically illuminated by the apparatus during operation, to indicate what mode the device is in, what is being displayed, or what data or other control keys are "live" as a group—that is, which keys can be used by the operator to enter information or instructions. Some of these indications will be mentioned below.

2. MECHANICS AND OPTICS

In FIG. **3** the upper section of the instrument case **12** is broken away at **121** to show the general internal layout of equipment. Supported from internal side bulkheads **123** and **125** is a map transport mechanism **130**, forward internal bulkhead and optical barrier **122**, projection lens **71** and focusing mechanism **70**, and large "folding mirror" **119**. A slot **124**, aligned with the slot **13** (FIG. **1**) in the upper case section, permits a film-transparency map **21**, in a film mount **22**, to be inserted into and removed from the position **21'** in the transport mechanism, along a line of motion shown at **22'** in FIGS. **1** and **3**.

Suspended behind the map transport mechanism **130** and not visible in FIG. **3** are a projection lamp, a "cold" collecting mirror, a collimating (or "condensing") lens, and various other elements to be discussed shortly. At the rear of the case, also not illustrated, are heat sinks to dissipate lamp heat, and removable access panels for lamp replacement and other servicing.

A small "folding mirror" **91** and its alignment mechanism **90** are suspended above and forward of the large "folding mirror" **119**, upon a support rod **108** that is in turn held by brackets **111** anchored to the case front section **11**. Three optical adjustments are provided for: (1) focusing of the projection lens, via knob **72**, cable **73** and mechanism **70**—which is detailed in FIG. **6**; (2) rotational alignment of the projected map with the compass rose **17**, via knob **112**, cable **105** and mechanism **90**—which is detailed in FIG. **7**; and (3) up-and-down alignment of the projected map with the screen, via knobs **109**—which simply rotate the support rod **108** relative to the brackets **111**. The first two of these adjustments are accessible with the upper case section **12** in place.

Electronic circuit boards providing the display, map transport-mechanism control, logic, and computing functions required for an operational apparatus are housed generally at **126**, in the right end of the case, and also just behind the control panel **14**.

FIG. **4** illustrates the optical elements in their mutual relationship. Light **211** from a thirty-watt tungsten-halogen lamp **61** irradiates a flat dichroic collector mirror **62**, which transmits lamp heat (that is, the infrared component of the radiation from the lamp) away from the film-transparency map, while turning the visible components **212** of the beam toward the map. This configuration permits enclosure of the lamp conveniently within the case below and to the rear of the transport mechanism **130** (FIG. **3**), without the necessity of extending the case or using a collimating lens **64** of impractically short focal length. The redirected diverging beam at **212** from collector mirror **62** is defocused by a 50.8 mm condenser lens **64**, providing generally parallel rays at **213** for illumination of a small portion section **214** of the map **21'**, here shown with mount **22"** held firmly in the transport mechanism **130**.

The map is a twelve- or thirteen-times reduction of the original standard NOAA (or foreign) chart. A six-element, 25 mm focal-length projection lens **71** forms a fourteen-times magnified image of the map section **214** at **214P** (or **21P**, as with reference to the entire map **21** per FIGS. **1** and **3**) at a louvered nine-by-nine-inch screen **15**.

The image distance is the sum of the distances from lens **71** to small "folding mirror" **91**, thence to large "folding mirror" **119**, and thence to the screen (center-to-center distances being the nominal ones). If folding mirrors **91** and **119** were omitted, and the image distance was established by the physical separation of lens **71** and screen **15** by the most direct center-to-center path, the optical system would require an unacceptably long case **10**, fore-to-aft, and would in addition require that the map **21** and projection lens **71** be oriented parallel to the screen **15**—that is, almost vertically—further interfering with the convenient space-saving placement of the lamp **61**, collecting mirror **62** and collimator **64** below and behind the tilted transport mechanism **130**. The two first-surface-coated "folding mirrors" **91** and **119** are therefore provided to "fold" the optical path into a more compact physical arrangement: the projected beam at **215** is deflected (at adjustable angles) by small "folding mirror" **91** along a downward path **216**, leading the beam to large "folding mirror" **119**, which deflects the beam forward at **217** to the screen. The mirrors are positioned and aligned so that the centerline of the projected beam strikes the crosshairs **16** normal to the screen surface **15**, thereby imaging the plane of the map **21'** upon the plane of the screen **15**, to minimize nonuniformity of focus across the screen **15**.

When a map **21'** and film mount **22"** are properly oriented in the transport mechanism **130**, the map image **21P**, **214P** is right-reading—that is to say, neither upside-down nor inside-out (like a mirror image). The film transparency **21'** is prepared from north-up charts, so the image **21P**, **214P** is likewise generally north-up, and the compass rose **17** that is fixed with respect to the screen **15** is therefore generally correct-reading with respect to the projected chart image. By adjustment of the alignment control **112**, the operator can bring the chart image into precisely north-up alignment with the compass rose, as will be explained in detail with reference to FIG. **7** below. These relationships, of course, require stable correct placement of the film in the film mount **22"**, and of the mount **22"** relative to the transport mechanism **130**; this requirement is satisfied by the

design of the transport mechanism (to be described next) and film mount (FIGS. **8** and **9**).

FIG. **5** shows the map transport mechanism and certain elements of the optical system, previously mentioned, that are positioned behind and below the transport mechanism—namely, the lamp **61**, collector mirror **62**, and collimator lens **64**. Suspended between the left and right bulkheads **123** and **125** is a heat-absorbing panel and light barrier **65**, which in turn supports the collimator lens **64** and an angled, apertured support bracket **63** for collector mirror **62**. The lamp **61** is supported by a socket and brackets that are not illustrated. The aperture (not shown) in the support bracket **63** permits heat transmitted by the dichroic collector mirror **62** to escape toward the right end of the case, for dissipation (along with other heat from the lamp) by heat sinks (not illustrated) at the back of the case.

The map transport mechanism **130** is suspended from the bulkheads **123** and **125**. Precision rods **131** and **132**, accurately parallel and horizontal, are each secured at both ends to the bulkheads. These two rods **131** and **132** form horizontal tracks upon which move the lower carriager block **133** and the upper carriage bearings **134**. The block **133** and bearings **134** are all fitted internally with linear ball bearings, for smooth motion along the horizontal rods **132** and **131**—which are hardened and ground to function effectively as part of the bearing races. The block **133** and bearings **134**, together with all of the components which interconnect them and which they support, may be regarded as the horizontal carriage. Secured to the lower carriage block **133** is a lead-screw follower **142**, which is threaded for operative engagement with a precision horizontal lead screw **153**.

The horizontal lead screw **153** in turn is coupled at **152** to the drive shaft of a precision stepping motor **151**, which is secured at **154** to the left bulkhead **123**. The coupling **152** between the motor **151** and the lead screw **153** is of a type which accommodates minor misalignment of the lead screw **153** relative to the horizontal track **132**. The order of magnitude of misalignments so accommodated is not such as would introduce binding or significant inaccuracies in map position, but rather is of a substantially smaller magnitude that would interfere with attainment of an absolute minimum of friction reflected back into the operation of the stepping motor **151**. It has been found that failure to provide friction relief at this point can sometimes lead to the motor's dropping steps, and thus a cumulative unknown error in map position.

Respective precision rods **135** are each journaled at their lower ends into the horizontal carriage block **133** and at their upper ends into journals **136** that are fixed to the upper carriage bearings **134**. Rods **135** are disposed accurately parallel to each other and normal to rods **131** and **132**. In practice, rods **135** (and mechanism **130**, in general) are inclined at an angle roughly forty-five degrees (45°) from vertical. For simplicity, however, the mechanism is shown in FIG. **5** (and referred to) as vertically disposed. Rods **135** thus form "vertical" tracks upon which moves a vertical carriage (sometimes referred to herein as the "map carriage"), composed of elements numbered **143** through **148**.

More particularly the vertical carriage or map carriage is made up of essentially four pieces: an upper (downward-facing) slotted or "U" rail **147**, with extensions **146** that carry linear ball bearings for smooth motion along the hardened, precision-ground vertical track rods **135**; a lower (upward-facing) slotted or "U" rail **145**, with similar extensions **143** that carry linear ball bearings for smooth motion along the track rods **135**, and an additional extension **144**, precision threaded for operative engagement with a precision vertical lead screw **139**; and two vertical spacer bars **148**, which interconnect the upper and lower rails **147** and **145** and hold the rails apart at a predetermined distance to accommodate the film mount **22**.

The vertical lead screw **139** is coupled at **138** to a precision stepping motor **137**, which is mounted to the lower horizontal carriage block **133**. Because the travel of the vertical carriage is somewhat less than that of the horizontal carriage, and because the motor **137** that drives the vertical carriage is mounted vertically and so is less likely to shift in position after adjustment, and because that motor **137** is somewhat more readily acessible for shimming adjustment than the horizontal drive motor **151**, there is a substantially less severe potentiality for misalignment of the vertical lead screw **139** than the horizontal one **153**. Accordingly an ordinary thrust bearing **138** may be adequate for the vertical drive, rather than a coupler of the type described above, and shown at **152**, for the horizontal drive.

It should now be apparent that when the map **21** (FIGS. **1**, **3** and **4**) in its film mount **22** is inserted, as along line of motion **22'**, into position within the map carriage or vertical carriage **143–148**, then suitable precision electrical stepping pulses applied to the motors **154** and **137** will respectively shift the map **21** horizontally and vertically. By virtue of this motion relative to the projection system (FIG. **4**)—and particularly relative to the projection lens **71**—the displayed map image **21P**, **214P** is shifted horizontally and vertically relative to the screen **15** and its crosshairs **16**.

It should further be clear now that the relationship between (1) the map scale and (2) the angular value of each motor step, as translated by the pitch of the lead screws **139** and **153** into linear motion, establishes a fixed calibration for the system in terms of mapped distance per motor step for any specified latitude. It must be borne in mind, however, that the map scale and therefore this calibration vary with latitude, in accordance with the principles of the Mercator (or other) projection system used in preparation of the chart from which the film transparency **21** is made. This latter variation must therefore be taken into account in the derivation of drive signals to the motors from latitude and longitude data.

FIG. **6** illustrates the details of the focusing system indicated generally at **70** in FIG. **3**. The projection lens **71** is disposed in or adjacent an aperture **127** formed in the forward bulkhead **122** (see FIG. **3** for orientation). Motion of the lens **71** along its longitudinal axis (that is, along the center line of the circular aperture **127**) moves the plane of focus of the map image **21P**, **214P** normal to the plane of the screen **15**, thus permitting the map image **21P**, **214P** to be focused on the screen **15**. Such motion is effected by operating control knob **72** (FIG. **3**), which in turn via a conventional cable termination (not illustrated) rotates the cable **73** about its own axis. The cable **73** rotates termination **84** (FIG. **6**), which in turn is secured to and rotates an adjusting screw **83**. The latter is threaded through an extension **89** of the focusing-mechanism mounting block **81**, which is firmly fixed to the forward bulkhead **122**.

The adjusting screw **83**, through a force-transmitting bearing **82** which is rotatably secured to the end of the screw **83**, engages one of the crosspins **77** of a dual (see

FIG. 3) lever 79. The two arms (one on each side of the mounting block 81) of the dual lever 79 are both pivoted at 78, and forceably engage a lens-support bar 74—to which the projection lens tube 71 is pinned at 86. The lens-support bar has press-fitted within it a bushing 75, which is internally dimensioned for sliding motion upon stud 88. The stud is threaded into the forward bulkhead 122, has a retaining head 87 at the end remote from the bulkhead, and carries a spring 76 between the retaining head 87 and the lens-support bar 74. The spring 76 urges the lens-support bar 74 (and with it the projection lens 71) toward the bulkhead 122 and thus into firm engagement with the level 79.

Thus if the control knob 72 (FIG. 3) is operated in the direction that advances the adjusting screw 83 toward the bulkhead 122, then the lever 79 forces the lens-support bar 74 away from the bulkhead, against the action of the spring 76, and the corresponding motion of the projection lens 71 away from the bulkhead 122 shifts the plane of focus of image 21P, 214P forward relative to the plane of the screen 15. If the control knob 72 is operated in the opposite direction, the consequent removal of force upon the screw-driven end of the lever 79 enables the spring 76 to force the lens 71 toward the bulkhead 122, shifting the plane of focus of the image rearward relative to the plane of the screen.

FIG. 7 illustrates the details of the alignment mechanism indicated generally at 90 in FIG. 3. The small "folding mirror" 91, discussed earlier, is rotatable in two orthogonal directions by means of this mechanism. The support bar 108 is itself pivotable in brackets 111 by operation of knobs 109, to effect rotation about a horizontal axis that is parallel to the plane of the screen 15. This rotation moves the image 214P, 21P up and down relative to the screen, and so permits adjustment of the image to fill the screen—but more importantly permits bringing the plane of focus of the image 214P, 21P into vertical parallelism with the plane of the screen 15. The rest of the mechanism shown in FIG. 7 is provided to rotate the image on the screen, so as to bring the projected grid lines of the chart into parallelism with the crosshairs on the screen 15.

The mirror 91 is affixed by double-sided tape 92 or equivalent adhesive to a mirror mounting plate 93, which is secured to a mirror yoke 94. The latter is rotatably pinned at 95 to a support block 110, firmly secured to the support rod 108 for rotation with that rod about its own axis as explained in the preceding paragraph. The angle of pivot of the mirror 91, mounting plate 93, and mirror yoke 94 about pivot pin 95 is controlled by the action of worm 97 and worm gear 96, which are in turn manipulated by means of the control knob 112. While the sector worm gear 96 is pinned firmly to the yoke 94, the worm 97 is held rotatably in place relative to the support block 110—by a worm yoke 103 (see also in FIG. 3). The worm is pinned at 99 to a shaft 98 that is formed integrally with a cable termination 104, and rotatably secured to the worm yoke 103 by means of the larger diameter of the cable termination 104 at the right of the yoke and a self-locking nut 101 threaded onto threads 102 formed in the shaft 98 at the left of the yoke.

If the control knob 112 is rotated clockwise, it operates through a conventional cable termination (not illustrated) to rotate the cable 105, which in turn rotates the cable termination 104 upon whose shaft the worm is pinned. The worm has, as drawn, a right-handed thread, and accordingly rotates in such a direction that the thread pattern shifts rightward in FIG. 7, rotating the sector worm gear 96 counterclockwise in FIG. 7. By reference to FIGS. 4, 6 and 7 it may be seen that this rotation causes the right side of the small "folding mirror" 91 to dip, and the left side to rise.

This clockwise (as viewed from the front of the apparatus) rotational motion of the mirror 91 in turn has three effects. The effect for which the control is provided is to rotate or "twist" the projected beam at 216 and 217 (FIG. 4), and thus rotate the image 21P, 214P counterclockwise on the screen. The three effects are as follows.

Clockwise rotation of the mirror 91 shifts the projected beam at 216 and 217 (FIG. 4) leftward on the large "folding mirror" 119 and on the screen 15. Thus clockwise rotation of the control knob (1) moves the image to the left on the screen, and moreover (2) foreshortens the optical path for that part of the projected beam that reaches the right side of the screen while lengthening the path to the left side of the screen. These alterations in path length within the case 11 cause the horizontal dimension of the plane of focus of the image 21P, 214P to be rotated clockwise about the vertical crosshair on the screen—moving the plane of focus forward (toward the operator) along the right side of the screen and rearward (toward the inside of the case 11) along the left side. This defocusing of the image along the left and right edges of the screen is generally—given the limited "travel" of the alignment mechanism 90—imperceptible.

The leftward shifting of the beam, however, is greater at the edge of the mirror 91 that is closer to the projection lens 71, where the mirror has greater optical-path "leverage," than at the edge of the mirror 91 that is closer to the screen 15. Therefore, (3) the upper part of the image on the screen moves further to the left than the lower part, and this differential effect appears as a counterclockwise rotation of the image on the screen.

Conversely, counterclockwise rotation of the control knob 112 of course (1) shifts the image to the right, (2) rotates the plane of focus counterclockwise about the vertical crosshair, and (3) differentially rotates the image clockwise on the screen.

Since the image rotation on the screen is a differential effect, however, adverse effects upon the left-right alignment of the image on the screen, and upon the horizontal parallelism of the focal plane with the screen plane will result if the vertical grid lines on the film map as installed in the apparatus are not very close to parallelism with the vertical crosshair on the screen. As suggested earlier, these adverse effects can be kept insignificant by limiting the travel of the alignment mechanism 90. This seeming solution, however, is illusory—for it may only result in a range of adjustment that is too small to compensate for rotational misalignment of the film map relative to the apparatus. The foregoing discussion serves to highlight the importance of providing a film mount that facilitates alignment of the film transparency in the apparatus in an orientation very close to the nominal one—that is, very close to north-up.

FIGS. 8 and 9 show the film transparency map or chart 21 in conjunction with a custom mount that is designed to permit firm, reproducible location of the map in the map carriage 143–148 (FIG. 5), at very close to the nominal north-up orientation, while protecting the film from damage and promoting its dimensional stability. It will be understood that motion of any part of the film relative to the map carriage 143–148 will produce a positional error that can be very significant in

terms of corresponding distance on the earth's surface—the relationship, of course, being determined by the effective map scale on the film.

The effective scale on the film is some fourteen times smaller than the scale at the screen display—which is slightly larger than the scale marked on the original chart from which the film was made. Hence a chart drawn to show a nautical mile as four inches will, when reduced to film, show a nautical mile as about a third of an inch; a positional error of only one hundredth of an inch at the film consequently would correspond, for such a chart, to nearly a thirtieth of a nautical mile, or some sixty yards. Such error sources can of course be minimized by use of large-scale charts when maneuvering in close quarters relative to shoals, narrow channel limits, and so forth. The point nonetheless remains that successful practice of the subject invention requires careful steps to minimize dimensional instability and gross motion of the film-transparency chart after the chart has been positioned in the apparatus and the apparatus has been "informed" of the chart position (as will be described in subsection 4, below).

Some precaution along these lines is represented by the heat-barrier plate **65** (FIG. **5**), previously mentioned, which helps retard heating of the film by the lamp **61**. Another precaution must reside in the selection of film that not only has good color fidelity and microfiche quality capability as to high resolution, but also is of the utmost high quality in dimensional stability— particularly relative to temperature change. A third group of precautions is embodied in the design of the film mount **22** (FIGS. **8** and **9**).

The film mount **22** is made up of two identical molded-plastic panels **22A** and **22B**. Also part of the assembly, in addition to the film transparency **21** itself, are two protective glass sheets **227**. The latter must be strong and of good optical quality. The plastic panels **22A** and **22B** are shown from opposite sides in FIG. **8**, and since they are identical the details of both sides of both panels may be gleaned from this single exploded view, with some additional clarity as to their interconnection added by FIG. **9**.

The two plastic panels **22A** and **22B** are hinged together at the right end (as drawn), each panel carrying a hinge pin **23A**, **23B**, and a linear hinge hook **24A**, **24B**. The hinge pin **23A** of the nearer plastic panel (as drawn) **22A** engages the linear hook **24B** of the rearward panel **22B**, as illustrated at the right end of FIG. **9**. At the same time the hinge pin **23B** of the rearward panel **22B** engages the linear hook **24A** of the forward panel **22A**, and the two panels may then be brought together by rotation upon these hinges to the parallel relationship shown in FIG. **9**. In this relationship the hook **25A** of the nearer panel **22A** engages the lip **226B** formed in the notch **26B** of the rearward panel **22B**. Likewise the hook **25B** of the rearward panel **22B** engages the lip **226A** formed in the notch **26A** of the nearer panel **22A**, and the two hooks and lips thus hold the panels firmly together.

Pins such as **222B** projecting from the forward face of the rearward panel **22B** fit into mating holes (not visible, but similar to those shown at **228B**) in the nearer panel **22A**, to minimize torsional distortion of the assembled mount. Similarly pins (not visible, but similar to those shown at **222B**) projecting from the rear face of the forward panel fit into mating holes **228B** in the rearward panel. Apertures **229A** and **299B** are finger holes facilitating application of force to separate the two panels **22A** and **22B** when disassembly is desired—as, for example, to change charts while reusing a particular mount.

The aperture or sight of the mount **22** is defined by aligned cutout edges **27A** and **27B**, through which shows the entire useful projectable area of the chart. Relieved areas **29B** (and similar areas not visible on the backside of the nearer panel **22A** in FIG. **8**, but shown at **29A** in FIG. **9**) serve to accommodate cement used to secure the one-millimeter glass sheets **227** to the panels **22A** and **22B**. The dams **28B** (and **28A** in FIG. **9**) prevent the cement, before it has solidified, from oozing out onto the "sight" portion of the glass. The relieved areas **29B**, **29A** also tend to accommodate any burrs, or other defects that may be present or may develop through accidents of handing, along the outer edges of the glass sheets.

The relieved areas **29B**, **29A** are sized to allow at most a very minimal rotational misalignment of the film map **21** relative to the mount panels **22B** and **22A**. In addition, the overall height of the panels **22B** and **22A** is controlled so that the flanges **223** slide smoothly into the channels or slots formed in rails **145** and **147** of the map carriage **143–148** (FIG. **5**)—but with an absolute minimum of vertical play. These two constraints together ensure that rotational misalignment of the film relative to the optical system will neither exceed the adjustment range of the alignment control **112**, nor require such a large adjustment range as to permit the adverse optical effects mentioned earlier to become significant.

Small bosses **224**, projecting outward from the flanges **223**, provide a snug but sliding press fit against the mating inner slot surfaces of the rails **145** and **147**. Because of their small size the bosses **224** are slightly deformable—decreasing in their "height" by expanding slightly in their "width"—in response to pressure from the mating slot surfaces. This deformation provides a press fit that remains snug over many repeated insertions and removals.

This latter feature ensures that the map once inserted into the transport mechanism will not shift during operation. Such a precaution is crucial to maintaining "calibration" of the apparatus to the map—that is, correspondence between the fixed registration points on the film and the stepping-system step numbers identified with those registration points when the map is inserted into the mechanism. (This calibration process is described in subsection 4, "Operation," below.)

3. ELECTRONICS

FIG. **10** illustrates the overall scheme of operation of the preferred embodiment of the present invention, in its interaction with other equipments (ouside the dashed boundary **270**) as well as its internal functioning. "Input" devices and stages are arrayed along the left side of the drawing, both inside and outside the boundary **270** of the self-contained unit, and "output" devices and stages are arrayed along the right side of the drawing, both inside and outside that boundary **270**.

It will be helpful to understand from the outset, however, that toward the central areas of the drawing it is progressively more difficult to make meaningful characterizations of the operating modules as "input" or "output." Rather, as is the case with most modern modular self-managing electronic systems, the hardware simply establishes usable channels of communication (such as bus **278** of FIG. **10**) between the several mod-

ules. One or more of the hardware modules are impressed with an operating protocol (i.e., "program"), under which these modules control themselves and other units to transfer information and directives among themselves, along the established channels, as required. These transfers of information and directives flow in multiple directions and according to multiple patterns that constantly shift during operation of the apparatus.

In fact, even as to some of the devices that are customarily thought of as clearly "input" or "output" in character, such as a Power Control & Monitoring Module **289** within the subject apparatus, or an autopilot **263** outside the apparatus, feedback paths of various kinds exist. Such feedback paths may be purposely provided, as for example the power-shutdown path **305** that controls the Power Module **289** in event of various kinds of improper operating circumstance, or a return signal (not illustrated) from the autopilot **263** to the subject apparatus to acknowledge completion of a commanded operation.

Some feedback paths are present that are not "purposely provided" but rather are inherent in the character of the system. For example, a human operator who reads the "output" devices, such as the alphanumeric display **272** or chart display **306**, and manipulates the keys at **271** and the ship's wheelhouse controls, directly exerts an effect upon the fundamental navigating parameters that are measured by the "input devices," namely the speed log **251**, compass **252**, or Loran-C receiver **253**—or even upon ship's power supply **254**. The same is true of an autopilot **263** responding to electrical signals at **303** and automatically manipulating ship's rudder **264** through mechanical connection **304**.

Preeminent among the input devices is a Keyboard Module **271**, which corresponds to the keys **32** through **52** (FIG. 2) on the control panel **14**, discussed earlier in subsection 1, "External Features." Information from the Keyboard Module **271** passes at **286** (actually via the Display Module **272**, but without any signal processing in that module) to the Slave Processor Module **273**.

With the exception of the ship's power supply **254** connected at **284** to energize the invention apparatus **270**, all of the external devices **251**, **252**, **253**, **261**, **262**, **263** are optional; the invention apparatus functions very satisfactorily without them. Addition of these "input" and "output" devices, however, greatly diminishes the amount of data to be estimated and/or manually entered, as well as the amount of data to be manually recorded—and implemented through manual control of the craft. Beyond the convenience factors, addition of a Loran receiver increases both the accuracy with which "course over ground" can be determined and (through interaction of DR and Loran computations as previously mentioned) the accuracy of calculated "course to steer."

If a speed log **251** is present and is a paddlewheel or equivalent type, and if a compass **252** is present and is a magnetic type, their respective signal lines **281** and **282** may be connected as at **281B** and **282B** directly to the Input/Output Module **277** within the apparatus. That module, as will be seen from FIGS. **16A** and **16B**, includes circuits for suitable processing of such signals. If the speed log **251** is a Doppler or electromechanical type, however, it must be connected instead at **281A** to a separate Speed Log and Gyrocompass Interface **275**, which supplies the special circuitry for processing signals from such speed-log types; and similarly if the compass **252** is a gyroscopic type it must be connected at **282A** to such a special interface **275**. In such instances the interface **275** passes the preprocessed signal(s) on at **287** to the bus **278** mentioned earlier, from which the necessary information can be picked off by any of the primary information-handling modules **279**, **273**, **277**.

The allocation of interfacing circuitry as between the Input/Output Module **277** and the separate Speed Log and Gyrocompass Interface **275** is a mere matter of engineering convenience and choice. The configuration illustrated reflects the particular balance of conveniences and choices adopted in my preferred embodiment of the invention.

Signals from a Loran receiver **253**, if present are applied at **283** to a Loran Interface module **274**, which is designed in such a way that it can be quickly configured for virtually any make and model of Loran receiver. Over three dozen types of Loran receiver are now commercially available, and the interface **274** advantageously accommodates as many as possible of these different types. The interface selects from the time-difference (TD) signals made available by the receiver **253** those two signals that provide the best position-fix accuracy, sorts out various other data provided by the receiver **253**, and converts the conventional sequential data format of the signal **283** to a parallel format for application at **288** to the bus **278**. (In some Loran receivers data is available in parallel format, and the interface is simply configured to omit this step.)

Another device that may be regarded as an "input" device, although it is typically passive after initial installation of the apparatus **270** in a particular craft, is the so-called Personality Module **276**. This device adapts the entire operation of the apparatus **270** to the "personality"—that is, operating region, type of speed log, etc.—of the craft in which it is installed. If a particular craft periodically moves from one operating region to another, then more than one corresponding Personality Module can be obtained, and easily interchanged in the apparatus as required.

Ship's power supply **254** provides electricity at **284** to the preferred embodiment **270**. The power provided at **284** first enters a Power Control & Monitoring Module **289**. This module permits switching the power to the rest of the apparatus (at **291**) on and off by touch-type keys **51** and **52** (FIG. 2). Control signals from these keys and associated low-level logic circuitry are fed back at **305** to control the module **289**. The signals at **305** also incorporate decision making within the Input/Output Module **277**, by circuits that sense destructively high or low levels of the voltage supplied from ship's power **254**. Thus the Power Control & Monitoring Module **289** also operates to interrupt power to the apparatus when necessary to prevent damage to the equipment or loss of stored information.

On the output side is the Alphanumeric Display Module **272**, whose function is to illuminate the displays **31** (FIG. 2) and all of the lights, similar to **32'**, in the upper left-hand corners of the keys **32** through **52** (FIG. 2), based on specific instructions received at **294** from the Slave Processor Module **273**. Also in the output column are the stepper motors (**137**, **151** (FIG. 5), which by respective mechanical connections **297** and **298** operate the rest of the visual chart-display system previously discussed in subsection **2**, Mechanics and Optics, and here designated very generally at **306**.

Optional external devices include two whose purpose is to produce permanent records of location and other operating parameters—a chart recorder **261**, receiving

x- and y-drive signals respectively at **299** and **301** from the preferred-embodiment apparatus **270**; and a logging printer **262**, receiving data at **302** from the apparatus **270**. It would normally be contemplated that a particular section of chart corresponding to the area of travel would be fixed in the recorder—or would be understood to correspond to a piece of blank recording paper in the recorder—and the x-y recording mechanism of the recorder would make a permanent record of the craft's travel on a particular journey through that area. Similarly a logging printer can be useful in preparing a permanent ship's log addendum showing position, heading, speed, set and drift if desired, and possibly other parameters, for a multiplicity of times during a trip.

The function of the optional autopilot **263** is apparent, but it should be noted that when such a device is present and interconnected for control at **303** by the subject apparatus **270**, there is a conceptually and significantly different result. Under these circumstances the computations and information-handling procedures carried on by the apparatus **270** directly control the gross physical position of the entire craft, its speed, heading, and "future history"—and those of all the people and goods aboard.

The allocation of functions of the remaining three modules **279, 273, 277** within the apparatus **270** is difficult to discuss meaningfully in the abstract—partially because the separation of functions as between these modules is not truly conceptual but to a degree arbitrary, being dictated in part by space limitations on various circuit boards, and like considerations. Moreover, as between the various modules certain functions may be regarded as split up, with "higher-level" portions of a given function occurring in one place, "lower-level" portions of the same function in another place, and "intermediate-level" portions of the same function in yet a third place. A very general introduction to the allocation of functions in these three modules will, however, be offered.

The Master Processor Module **279** generally manages the operation of the entire system, calling up the various functions of the many components within itself and in the other modules at the appropriate times. The Master Processor Module **279** also organizes the reaction of the entire system to demands for system "attention" created externally—as, for example, by operator commands at the Keyboard Module **271**, or by drastic changes in voltage at **284** from the ship's power **254**. The Master Processor Module **279** also contains most of the generalized memory banks in the apparatus **270**, storing both the general system program and the necessary data for its implementation.

The Slave Processor Module **273** performs more specialized, repetitive tasks of interpretation and interfacing—but tasks still complex enough to require the power of a programmable microprocessor unit. Module **273** decodes the entries made at the Keyboard Module **271** and formats the decoded information for use by the various modules **279, 273, 277**. The Slave Processor Module **273** also performs a similar function for speed-log and compass data, converting (where necessary) serially presented data to parallel data and reformatting the data for use throughout the system. Module **273** also contains a continuously operating "calendar clock," providing the system **270** with all necessary time data. Slave Processor Module **273** itself manages the reading of the calendar clock, performing decoding and reformatting functions analogous to those it performs for the keyboard, speed log and compass.

On the output side the Slave Processor Module **273** also sorts out, organizes and formats data for display in the Alphanumeric Display Module **272**. The Slave Processor Module **273** also manages the operation of stepper motors **137** and **151**, translating between the stepping-system position information (in terms of step count) manipulated within the Master Processor Module **279**, and the actual serially presented stepping pulses at **295** and **296**. The Slave Processor Module **273** performs this function even when the stepper motors are directed manually through the entry of commands at the Keyboard Module **271**. It is the Master Processor Module, however, which deals with the relationships among the Mercator (or other) projection function, the map scale, and the present position of the map carriage.

The Input/Output Module **277** performs interfacing tasks of a lower order than those handled by the master and slave processors: voltage and impedance transformations (as, for example, to generate the higher-power signals **295** and **296** required to operate the stepper motors **137** and **151**), analog-to-digital transformations (as for the sensing of overvoltage and undervoltage in the ship's power at **291**, and the input of signals at **281B** from a paddlewheel-type ship's log **251**), low-level logic buffering, and some intermodule connections that require no signal processing at all.

Indicated generally at **278** are the composite of a Bus Module (illustrated in FIG. **17**) with a data bus that consists essentially of cabling between and within the various modules as indicated. A few active circuit components have been placed on the Bus Module—a warning buzzer and its power circuit, a five-to-twelve-volt DC-to-DC converter, and others that will be mentioned later. FIGS. **11A** and **11B** show a suitable Keyboard Module (**271** in FIG. **10** cooperating with control panel **14** in FIG. **2**). As can be seen, Keyboard Module **271** comprises switch closures (**32–49, 51, 52, 1102–1108**) and cable connections. The switch closures are all provided in the form of touch-type normally-open "keys," disposed, e.g., in control panel **14** (FIG. **2**), and the cable connections are all through a common cable to the Display Module (FIG. **12**, and **272** in FIG. **10**).

The keys are nominally divided in two groups: "individual" keys and a keyboard array. Respective "individual" keys are depicted in FIG. **11A**, some (e.g., key **38**) having individual connections at both sides of the switch closure, and some (e.g., keys **43**) being wired in groups of two or four to a common point at one side of the switch but having separate individual lines at the other side. Twenty-six keys (**32–37, 39–42, 44–49**) are disposed in an eight-column, four-row array, as shown in FIG. **11B**. All the keys in each row of the array have one side wired to a common terminal for that row, and all the keys in each column have the other side wired to a common connector terminal for that column. By this means all twenty-six keys in the array are wired through only twelve connector pins—the sorting out of the information from the keys being performed, of course by logic elements elsewhere in the system.

FIGS. **12A, 12B, 12C** and **12D** show the details of the Display Module, corresponding generally to the Alphanumeric Display Module **272** of FIG. **10** but also incorporating certain other elements to be desribed.

Referring now to FIGS. **12A** and **12B**, the LED displays **31** (FIG. **2**) and closely associated circuitry will be described. Respective convention display driver

circuits, **1202–1207**, such as, e.g., DL2416 display units, each provides four display digits, and include the logic circuits to translate binary information into an alphanumeric character for those four places. In other words, the display units **1202–1207** are of the so-called "intelligent display" type. Thus DL2416 units **1202–1204** make up the upper one of the two displays **31** (FIG. **2**, and DL2416 units **1205–1207** make up the lower one of the twodisplays **31**—each with twelve characters.

Binary data is provided from the Slave Processor Module **273** (FIG. **10**) through a connector **1208** (e.g., a LC5B connector) to a suitable buffer and line driver unit (such as an 74LS244), and are applied to all six DL2416 display units **1202–1207** in parallel. Only one of the DL2416 character of only one display units **1202–1207**, however, responds to any given binary data group. This selection is made on the basis of control information from the Slave Processor Unit **273**. A first set of control signals from Slave Processor Module **273** is provided, in binary form, on the six "DISPLAY" signal lines (pins **25** through **30**), indicating which display unit **1202–1207** is to be actuated to accept data, is applied to two display-select decoder Buffer Units **1212–1213**. Display select buffers **1212** and **1213** suitably comprise conventional hex buffer integrated circuit chips (ICs), such as 74LS367 integrated circuits. The two decoders **1212, 1213** provide high-low actuating signals to pins **1** and **2** of each display unit **1202–1207**. A second set of control signals, provided at pins **39**, **40** and **41** of connector LC5B to a suitable decoder **1214** indicate which character position is to be actuated. Decoder **1214** suitably comprises a 74LS08 quad 2-input AND gate integrated circuit.

Referring now to FIGS. **12C** and **12D**, light-emitting diodes **6, 32, 33** (FIG. **12D**) and **CR1–CR30** (FIG. **12C**), which provide the small indicator lights, such as **32'** (FIG. **2**), in the upper left-hand corners of the keys **32** through **52**. LEDs **6, 32** and **33** are treated as "discrete'-'—though they are operated from a common five-volt supply—and the other thirty-one LEDs (**RR1–CR30**) are actuated in an array (lower left) analogous to the keyboard array discussed earlier. All the LEDs in each column of the array have their positive sides connected to a respective common power switch **1216** for that column (suitably one transistor in respective quad-switching units Q2T2905). Similarly, all of the LEDs in each row have their negative sides connected to a respective common switching buffer **1218** for that row (suitably comprised of four-channel buffer unit **7407**). The column and row drivers **1216** and **1218** are of course in turn actuated by logic elements—to be described—in the Slave Processor Module.

With reference now to FIG. **12**, respective through-connections between the Keyboard Module **271** (LC7A connector **1250**) and the Slave Processor Module **273** (LC5B connector **1252**), are provided.

FIGS. **13A–13J** show the details of the Slave Processor Module, **273** in FIG. **10**. Referring now to FIGS. **13A** and **13B**, the inputs from the Keyboard Module **271** and data and address outputs to the Display Module **272** just discussed appear at the pins of respective connectors **1302** (FIG. **13A**) and **1304**, respectively. Connectors **1302** and **1304** suitably comprise a LC5A connector, connector **1304**, in turn, variously effects connections to a buffer unit **1306** (suitably a 74LS244), and a suitable decoder unit **1308**, such as a P8279.

Buffer **1306** and decoder **1308** are connected to data BUS**278**. BUS**278** is comprised of lines **DB0** through **DB7**, which form an eight-wire data and command bus that runs throughout the Slave Processor Module **273** and is cabled to other modules in the system. Within certain other parts of the system this data bus becomes part of a sixteen-line bus. As previously noted, information on the bus is simply presented to each of the several processors, decoders and the like in parallel, and separate address or command lines provide the directives to those same components—indicating which components units should use (or emit) information on the data lines, and when.

As can be seen here, however, the same eight lines **DB0** through **DB7** that carry data as such to the buffer **1306** for transmission to the "intelligent displays," **1202–1207** (FIGS. **12A, 12B**) and from the decoder **1308**, upon entry of data at the keyboard **271**, also double as control lines to the decoder **1308**, for selection of the LEDs and displays to be actuated. Due to such complexities it is not feasible to trace the information to and from the decoder **1308** completely, but a conceptual tracing can be suggested here, and more complete information is embedded in the programming section that follows (subsection **5**).

Control of the decoder **1308** is provided by control signals applied it at pins **10, 11, 22, 21, 3**, and **9**—signals that are part of a control bus which enters (from the Input/Output Module **277**) at connector **1310**, such as an LC2B (FIGS. **13A, 31B**), and which is applied to various other components, in parallel with the decoder, to ensure that those components will all operate in synchronism to perform the various indicated functions, such as reading or writing to memory, selecting a particular keyboard display, and so forth.

Referring to FIGS. **13A, 13B** and **13C**, Slave processor Module **273**, includes two slave processor units, **1312** (FIG. **13A**) and **1313** (FIG. **13C**). Slave processor units **1312** and **1313**, suitably comprise universal peripheral interface integrated circuits (IC) such as 8041A ICs. Processor **1312** is utilized to control stepper motors **137** and **151** (FIGS. **5** and **10**), and the processor **1313** is used to control the decoder **1308** and buffer **1306**, to receive and send data and control signals from and to the keyboard (**271**) and display (**272**) units as just described.

Slave processor **1313** controls the formatting and the timing of incoming and outgoing data, fitting the information transfers into the overall schedule of uses of the data bus. A clock calendar **IC1314**, suitably a MSM5832RS (FIG. **13C**) is held to a fixed time base by a 32,768 kHz crystal **F1** calendar **IC1314**. The calendar emits serial clock pulses that are received by slave processor **1313**, which accumulates and interprets the clock signal to develop usable time data for the overall system operation. Slave processor **1313** also receives serial data from the compass **252** (FIG. **10**) and speed leg **251**, generally via the Input/Output Module **277**, and accumulates and interprets these data to present speed and heading values to the data bus for use in the Master Processor Module **279**.

A comparable function, but at a lower level, is performed by a port control unit **1316** (FIG. **13E**). Port control unit **1316** suitably comprises a standard universal synchronous/asynchronous receiver/transmitter IC (USART), such as a P8251A in FIG. **13E**. Port control unit **1316** reformats outgoing data for use (after impedance adjustment and the like in the Input/Output Module) by a general-purpose two-way communication interface—advantageously an A.N.S.I. standard **RS232** interface—which can accommodate an x-y plotter, a

fuelmeter for performance monitoring, or an autopilot. The port control unit **1316** also reformats incoming data from any of such devices in the nature of "ready" or "acknowledge" signals, and, upon command, places such information on the data bus.

Port control unit **1316** may be helpfully conceptualized as permitting the processors to treat any of the external otuput devices as if it were an address in the internal memory of the apparatus (FIG. **18**A). An equivalent job is done for an external logging printer by a "printer port" control unit **1318** (FIG. **13**B). Printer control unit **1318** also suitably comprises a conventional USART, such as a P8251A. Control units **1316** and **1318** operate at a baud-rate established by master processor **279**. A suitable baud-rate pulse from master processor **279** is provided at pin **50** of a connector **1319** (e.g., LC2B type) via Input/Output Module **272** (FIG. **16**G). The baud-rate signal is applied to a divider **1320**, suitably a conventional dual 4-bit binary counter, such as a 74LS393.

Similarly, with reference to FIG. **13**B, the master processor is permitted to operate as if it were simply writing into its own internal memory in selecting the particular (DL2416) display unit **1202–1207** (FIG. **12**) to which to write, by means of a first decoding unit **1322** (FIG. **13**B). Decoder **1322** suitably comprises a conventional **1** of **8** decoder/demultiplexer IC, such as 74LS138. Decoding unit **1322** is connected to the Display Module **272** by pins **25** through **30** of a connector **1323** (suitably an LC5A connector). Specifically, the YØ, Y1 and Y2 outputs of decoder **1322** are applied to display select buffer **1212** (FIG. **12**A), and the Y3, Y4 and Y5 outputs are applied to display select buffer **1213** (FIG. **12**B).

In just the same way a lower decoding unit **1324** (also suitably a 74LS138) permits the master processor to "think" that it is merely writing into its own internal memory when it is actually generating signals to select the general-purpose interface, the printer, or other units for exchange of information. It is also by use of lower decoder **1324** that the master processor generates selection signals enabling it to communicate with one or the other of the slave processors **1312** or **1313**, or with the display module **272** considered as a unit, or with the direction keys ("cursor keys") **43**, **44** (FIG. **2**) as a unit, or with warning-buzzer circuitry (to be described).

Referring again to FIG. **13**A, the 8041A slave processor **1312** manages the operation of the stepper motors. It translates numerical instructions, received in terms of binary-coded stepper-motor position (that is to say, step number), into properly timed and ramped serial pulses to the motors, via the Input/Output Module **277**. "Ramping" is provided to accomodate the inertial characteristic of the drive system. In addition to data-bus connections and output connections to the stepper motors, 8041A slave processor **1312** also receives various control bus signals. Such signals include the selector signal from the lower 74LS138 decoder **1324** (FIG. **13**B) just discussed, as well as read, write, and address signals from the control bus **278**, and, from LC6 connector **1326**, signals from limit switches installed (though not illustrated in FIG. **5**) on the map transport mechanism **130**.

In addition, 8041A slave processor **1312** receives directly from the keyboard and display board, at pins **13**, **14**, **19** and **20** of LC5A connector **1302**, direction signals (NORTH KEY, SOUTH KEY, EAST KEY, WEST KEY) for manual control of the stepping system. These same direction signals are also connected to another memory port unit **1330**, suitably an octal inverting bus/line driver such as a 74LS240, shown on FIG. **13**H, which permits the master processor to read the status of the direction signalling keys **43** (FIG. **2**) as if they were internal memory locations.

Several components on the Slave Processor Module **273** receive a "reset" signal, which is generated by the Master Processor Module **279** to pin **23** of LCB2 connector **1310** (FIG. **13**A) when the system is first turned on—so that all components "power up" in a systematic controlled fashion.

FIGS. **13**F–J depict further portions of the Slave Processor Module **273**. With specific reference to FIG. **13**J, a regulated voltage supply as required by certain circuits will be described. The ship's power entering at pins **55** and **56** of connector **1350** (suitably a conventional LC2B connector) is first regulated by a conventional fixed voltage, 3-terminal regulator device **1352**, such as a 78L05 device, and filtered by the network **C28**, **CR9**, **R15**, **C31**, **C30**, **CR8** and **C29**. This relatively coarse regulation furnished by the commercial 78L05 regulator **1352** is sufficient as a supply to relay logic, as indicated in FIG. **13**F and in FIG. **19**.

Additional, finer regulation, however, is required to supply a reference voltage for use in the power-fail logic circuits in the Input/Output Module **277**. Such fine regulation is supplied by the circuit **1354** that includes transistors Q1 and Q2 in FIG. **13**J, and the resulting very stable voltage level is transmitted to the Input-/Output Module via pins **53** and **54** of connector **1356** (suitably a LC2B connector) (FIG. **13**I).

Referring now to FIG. **13**H, memory port **1320** (e.g., 74LS240), mentioned earlier, permits the master processor to treat signals from the direction keys **43** (FIG. **2**) as arising in memory locations. When any one of the direction keys **43** is in use to direct the map transport mechanism manually, 74LS240 memory port **1330** permits notification of the master processor **279** that the direction keys—as a group—are in use, so that the 8041A slave processor **1312** (FIG. **13**A) can take control.

The memory port **1330** also, however, accommodates the dual use of the direction keys: when they are used to indicate a coordinate direction for the keying of latitude and longitude, their individual status is significant to the master processor. The memory port **1330** also receives signals indicating whether a compass (terminal **45**) or knotmeter (terminal **40**) is present in the system, and permits this information to be transmitted, as a bit in memory, to the master processor.

Referring now to FIG. **13**F, three inverters, **1360**, **1361**, **1362**, such as 74LS04N gates, and a single dual 4-input NAND gate **1363**, such as a 74LS20 gate, cooperate as a "debounce" circuit: they eliminate erraticisms in the switch-closure resistance when the corresponding control keys (POWER ON key **51**, SCREEN ON key **542**, and "f"—function—key **38**) are touched by the operator (see FIG. **2** for keyboard locations).

Referring now to FIG. **13**G, three flipflops, **1364**, **1365** (FIG. **13**G) and **1366** (FIG. **13**E), suitably commercial dual JK edge-triggered flipflops, such as 74LS113 respectively provide toggling or latching action for the same three control keys, so that when any of these keys is touched the resulting pulse generates a status signal that continues after the key is released. The resulting status signals generate buffered control signals for passage to the indicator lights on the Display Mod-

ule (FIG. 12), the power relay circuits on the Power Control & Monitoring Module (FIG. 19), and the P8279 decoder 1308 in FIG. 13E.

The three 74LS113 flipflops, 1364, 1365 (FIG. 13G) and 1366 (FIG. 13E), are reset (turning off the power to the system or to the projection lamp, and cancelling the "shift key" effect of the function key) by various conditions. The lamp-control flipflop 1364, is reset when the power control flipflop 1365, is reset. Thus the lamp power is turned off when the logic circuits are turned off.

In addition, the lamp-control flipflop 1364 is reset when the SCREEN ON key 52 is touched while the lamp-control flipflop 1364 is already set—subject to an inhibit signal applied from a debounce one-shot 1368 (FIG. 13F), suitably a dual retriggerable monostable multivibrator, such as a 74LS123. Debounce one-shot 1368 introduces a fraction of a second's delay, established by R3 and C2 as a minimum interval between actuations of the SCREEN ON key 52 that will produce a response. Thus, touching the SCREEN ON key 52 several times in succession will alternately switch the projection lamp on and off, but not if the key is touched at too short intervals.

Similar operation is provided for the POWER ON key 51 and the "f" key 38, except that the power-control 74LS113 flipflop 1365 is also resettable by a signal from the overvoltage circuitry on the Input/Output Module (FIGS. 16A–16H, and 277 on FIG. 10), via pin 11 of LC2B connector 1356A (FIG. 13F), if the supply voltage to the system rises above seventeen volts; and the function-control 74LS113 flipflop 1366 (FIG. 13E) is also resettable from the master processor. It may be noted that the toggling action of the function-control flipflop permits the operator to reverse his own error if he accidentally touches the "f" key when he really does not want the results of doing so.

Referring now to FIG. 13H, a 74LS113 flipflop 1367 latches the warning buzzer on and off in response to control signals from the master processor.

The external-reset one-shot 1370 (FIG. 13G), suitably a 74LS123, provides "debounce" action for an additional key on the control panel 14—one that is not labeled, but rather is camouflaged and intended only for use by a qualified serviceman. This key is shown as the "EXTRA 3" key 1104 on FIG. 11, wired through pin 51 of LC5B connector 125A (FIG. 12D) and LC5A connector 1359 (FIG. 13F) to test point TP2 (FIG. 13F). The output status signal from the debounce 74LS123 one-shot 1370 provides an external-reset signal at test point TP1 that is suitable for application to the logic circuit.

This system is used by the serviceman in the event that unforeseen operational procedures have somehow caused the system to stop out of sequence and therefore to "lock up." The external-reset signal resets the entire logic system to an initialized condition, while preserving most of the information in the system's memory, and initiates a test routine. The 74LS123 one-shot 1368 is necessary to complete the debounce circuit. For all the other debounce circuits shown in FIGS. 13E, 13F and 13G, this latter function is performed in common by the 74LS123 one-shot 1368, but the serviceman's hidden key requires a separate unit—because the rest of the system (including the common debounce flipflop) is assumed to be "locked up."

FIGS. 14A–14H illustrate the circuitry of the Loran Interface 274 (FIG. 10). In FIG. 14A is the heart of the interface, a slave processor 1400, suitably an 8085A-2 microprocessor, which decodes data obtained from the Loran receiver, screens the data and selects the best data for use in the rest of the apparatus 270 (FIG. 10), and reformats the selected data for passage on busses 288 and 278 (FIG. 10) to the Master Processor Module 279 (FIG. 10). Program storage for the 8085A-2 slave processor 1400 is provided in memory unit 1402 (FIG. 14B), suitably a 2732 programmable read only memory (PROM), and data storage is provided in two random-access memories (RAMs) 1404, 1405 (FIG. 14C), suitably 2114 RAMs.

Before reaching the 8085A-2 slave processor 1400, however, incoming data received as serial pulses from the Loran receiver are converted to parallel binary presentation in a shift register 1408, suitably comprising four LS299 shift register circuits (FIG. 14G). A programmable timer circuit 1410 (FIG. 14G), suitably formed of respective LS393 counter circuits, permits generation of a local clock signal to accommodate the operating rate of the Loran receiver, thereby synchronizing operation of the receiver and the interface 274. A conventional universal asynchronous receiver/transmitter unit (UART) 1412 (FIG. 14H), such as a COM2017, manages the coordination of the Loran receiver's internal logic circuits and their timing with the internal logic and timing of the interface 274.

Referring now to FIG. 14B, various address decoders 1414, 1415 (suitably LS138 1 of 8 decoder/demultiplexer circuits) and 1416 (suitably an LS139 dual 1 of 4 decoder/dimultiplexer circuits) and master-slave signal select device 1418 (suitably an LS157 quad 2-input multiplexer) permit information transfer between the memory units V1402, 1404 and 1405, mentioned above and the 8085A-2 slave processor 1400 (FIG. 14A), and between the Master Processor Module 279 (FIG. 10) and the 8085A-2 slave processor 1400. Referring to FIG. 14D, three address decoders, 1430, 1431, 1432, suitably formed of 82S129 bipolar memory circuits, decode addresses received from the master processor, and a LS74 flipflop 1434 (the upper right corner of FIG. 14D) synchronizes the master processor in module 279 with the Loran interface. The master-to-slave register LS74 flipflop 1436 and related circuitry and an LS374 slave-to-master register 1438, respectively, provide repositories of information to be transferred between the two processors, so that neither processor is required to wait for the other to be ready to use or supply information.

Three LS374 processor registers, 1440, 1442, 1444 (FIG. 14F), store intermediate data and control signals generated and reused during operation of the interface 274. A baud rate generator 1446, suitably comprising an LS151 multiplexer 1447 (FIG. 14C), LS161A synchronous counter 1448 (FIG. 14B), and a LS393 decoder binary counter 1449 (FIG. 14C) divide down the clock pulse train from programmable timer 1410 (FIG. 14G), to derive a suitable character transfer ("baud") rate. The interrupt timer, consisting of LS393 decode binary counter 1450, further counts down the baud clock train to generate a Loran signal interrupt, which is periodically directed to the Master Processor Module 279. The Loran signal interrupt occurs roughly every five minutes, and causes the Master Processor Module 279 to interrupt its other processes when next possible, and to receive a current set of Loran time differences (TDs).

An LS240 option-strap buffer 1452 (FIG. 14F) is wired to terminal straps that are to be suitably jumpered to cause various features of the interface 274 to come

into operation—to accommodate the Loran receiver **253** commercial type that is in use. The various other buffers in the Loran receiver FIGS. **14A** through **14H** are utilized conventionally.

FIG. **15** shows the Personality Module **276**. This unit contains a dual 2732A read-only memory (ROM) **1500**, **1501**, in which are stored regional geographic data, Loran transmitter locations for the operating region(s) of interest, and certain constants used in computations. The information in this dual memory is selected—as between respective two halves **1500**, **1501** of the memory—by the two signal lines at pins 7 and S of an LC3B connector **1504**, and by address signals at the twelve pins shown just above those. Actuation of a ROM select line and an address select line causes binary data to appear on the data bus **1506** (DB0–DB7), for transmission to the Input/Output Module **277** (FIG. **16A–16H**).

Also shown in FIG. **15** is a set of wiring terminals **S1** through **S4**, for hand-jumpering to tailor the voltage levels of the signal from the particular type of speed log **251** (FIG. **10**) in use to the speed-sensing circuitry in the Input/Output Module **277**.

This last point may be better understood with reference to the speed-sensing circuitry where it appears at the lower right-hand corner of FIG. **16D**. FIGS. **16A–16H** present the electronics of the Input/Output Module, block **277** in FIG. **10**. As seen in FIG. **16D**, pin **3** of LC3 connector **1504** is grounded within the Input-/Output Module, and pin B is connected to a logic signal line at pin **45** of an LC2A connector **1602**; when these two lines are wired together by jumpering directly across at **S4** (FIG. **15**), the Slave Processor Module **273** (and particularly the right-hand 8041A slave processor **1313**, shown in FIG. **13C**) receives a "low" signal indicating that a knotmeter is in use—and therefore that dead-reckoning calculations should be based on the knotmeter output signals rather than on numerical entries at the keyboard.

Various other possible combinations of jumpers have the effect of applying various degrees of attenuation or division of the voltage from the knotmeter sensor for presentation to the circuitry in the Input/Output Module. The first stages of that circuitry, including LM358 analog operational amplifiers **1604**, square off the typically sinusoidal signal from the knotmeter to provide a pulse stream at terminal **34** of LC2A connector **1602**, for application to the slave processor via pin **34** of LC2B connector **1303** FIG. **13C**.

Referring now to FIG. **16C**, SAA1027 twin stepper controllers **1606**, **1608**, service, respectively, the horizontal and vertical stepper motors. These controllers receive directional control status signals at, respectively, pins **15** and **18** of LC2A connector **1610**, and receive serial drive pulses at, respectively, pins **17** and **20**. Each of the two controllers, in turn, produces at its four output terminals a pattern of four voltages which shifts with each successive step input pulse; when these four output lines are connected to the four coils of the four-phase stepping motor **137** or **151** (FIG. **10**), the result is a rotating pattern of voltages at the motor coils—and hence a rotating magnetic field that precisely positions the rotor of the motor, and rotates the rotor in precise synchronism with the step pulses applied to the controller inputs. These controllers may if preferred be placed with power-level translators (from logic levels to drive levels) in a separate circuit module adjacent to the motors.

Referring now to FIG. **16A**, an address decoder **1612**, suitably a 93427-001 bipolar ROM, translates the system of memory-selection address lines in the Personality Module (FIG. **15**) ROMs into address locations of the Personality Module as "seen" by the Master Processor Module. That is to say, a range of address locations as called out by the Master Processor Module is translated into the addressing system of the Personality Module. In addition, respective 74LS02 gates **1614**, **1616** and **7406** inverter **1618** provide a signal (XACK) that—in combination with control signals from the master processor—generates an acknowledgement signal to the master processor, indicating that the Personality Module ROM is ready to be read.

Referring now to FIG. **16B**, a voltage regulator circuit, that includes 78L05 regulator **1620** and that provides a regulated voltage to an external magnetic compass, **252** in FIG. **10**. This regulated voltage is used by the compass repeater to provide a compass-input signal at pin **47** of LC2A connector **162**, for passage to the Slave Processor Module **273** (FIG. **10**), and particularly to the right-hand 8041A slave processor **1313** (FIG. **13C**, **13D**) in that module.

The compass signals so produced are generally in the form of a series of pulse bursts, the number of pulses in each burst representing a compass heading, in degrees and fractional degrees. When received at pin **47** of LC2B connector **1311** on the Slave Processor Module, FIG. **13A**, the pulse burst is applied directly to pin **39** of the right-hand slave processor **1313** (FIGS. **13D**, **13C**) and is also applied with a short time delay to pin **34** (FIG. **13D**). The signal at pin **39** directs the processor to prepare to start counting the pulses in the burst, and the signal at pin **34** then provides the pulses to be counted.

Returning to FIGS. **16A–16D**, twelve 74LS04 buffers **1622** (FIG. **16A**) operate conventionally to buffer signals from the Master Processor Module **279** (FIG. **10**) in passage to control addressing within the Slave Processor and Personality Modules **273** and **277**. Respective 75188 and 75189 drivers, generally indicated at **1624** (FIG. **16B**), lower signal impedance for transmission to and from output devices such as the logging printer (the upper four drivers) and a recorder, autopilot, or fuelmeter (the lower four drivers).

Other Input/Output Module **277** components appear in FIGS. **16E–16H**. In particular, referring to FIGS. **16E** and **16F**, buffering of additional signals between the Master Processor Module and the Slave Processor Module is provided by circuitry generally indicated as **1626**. Terminal lugs **1628** (FIG. **16*f***) are provided for manual jumpering to permit custom tailoring of the response of the unit to the timing requirements of external output devices such as a logging printer **262** (FIG. **10**), autopilot **263**, or fuelmeter or the like (not shown).

The input signals to this manual-jumpering "interrupt matrix" **1628** are "KBDINT" or "keyboard interrupt," which is generated by P8279 keyboard decoder **1308** (FIG. **13E**); and "TXRDY (SER)" and "RXRDY (SER)" or "ready to transmit serial data" and "ready to receive serial data," which are generated by the P8251A port control **1316** (FIG. **13E**). The relative prioritization of these signals relative to each other, and relative to the other priorities among the many operations carried on by the apparatus **270**, can vary with the character of the particular commercial output units **262**, **263**, etc., employed.

The Master Processor Module **279** operates on a well-defined system of priorities, in which each device

that must communicate with the master processor **279** or send or receive information over the bus **278**—whether it be the P8279 keyboard decoder **1308** in the Slave Processor Module (FIG. **13E**), responding to actuation of keys at the control panel **14** (FIG. **1**), or the Loran Interface (FIG. **14**), responding to its own internal interrupt clock (LS393 decode binary counter **1450** in FIG. **14C**)—generates an "interrupt" signal, announcing to the master processor that it is prepared for a communication.

If all of these "interrupt" signals had the same priority, of course, the apparatus would rely upon chance to avoid interference between communications from more than one source at a time, and such operation would be unfeasible. Consequently all of the "interrupt" signals, or, more concisely, all of the "interrupts," are assigned specific priorities, and any that can possibly occur simultaneously with each other are assigned priorities that are different from each other. The interrupt signal lines, designated "INT**0**" through "INT**7**," are given priorities in the Master Processor Module **279**, as will be noted later in conjunction with FIG. **18**.

"Interrupt matrix" **1628** (FIG. **16F**) thus permits the keyboard interrupt, the serial-data-transmission interrupt, and the serial-data-reception interrupt to be appropriately assigned to "interrupt levels"—that is, to priority levels—that are appropriate for the types of external equipment involved. This hand-jumpering must of course be performed in accordance with adequate insights into the structure of the priority levels assigned to all the operations in the system, and the significance of that structure.

Referring now to FIG. **16G**, protective circuitry **1630** is provided to shut down the system systematically and safely, with a minimum of memory loss, when general supply voltage "+**12**VSP" rises above seventeen volts or memory voltage "+**12**VSW" falls below nine. The voltage line "+**5**VBB" appearing at upper left in this quadrant of FIG. **16G** is the fine-regulated reference voltage developed in the regulator circuitry **1354** (FIG. **13J**), discussed previously. Respective LM358 comparators **1632**, **1634** compare the two supply voltages, respectively divided down by R**13** and R**15** (for the general supply) and by R**14** and R**12** (for the memory supply) against a reference voltage—further well defined by application to an LM236A zener diode **1636**.

If either comparator detects unacceptable supply voltage levels it triggers **4001** "NOR" gate **1638**, resulting in initiation of a systematic power-down routine. In addition, in the case of overvoltage, output signal of comparator **1632** is applied directly to one input of a two-input NOR gate **1640** to generate an overvoltage signal at pin **11** of an LC2A connector **1642**. That signal becomes the power reset signal applied to terminal **10** of the power-control flipflop **1365** (FIGS. **13F**, **13G**). When flipflop **1365** is set, the input ship's power is immediately interrupted to protect the lamp and all other systems from sustained overvoltage.

When NOR gate **1638**, mentioned just above, is triggered, it immediately produces a power-disable ("PWRDIS") signal, which is latched by a MC14528 flipflop **1644**. This power-disable signal resets a 4013D type flipflop **1646** generating a memory-disable signal at pin **52** of an LC1A connector **1647** that immediately operates to prevent any further transfer of information into or out of the memories in the Master Processor Module—thus preserving all the information in those memories as well as conserving the power required to continue any information transfer that may be in progress.

The output of the NOR gate **1638** is also applied to a MC14528 monostable multivibrator **1648**, which initiates a "power-failure in" ("PFIN") signal to the master processor **279**. Referring briefly to FIG. **18**, this signal is applied to a 8088 central processor unit **1800** via an input terminal **17** ("NMI," for "nonmaskable interrupt") which is separate from the terminal ("INTR," for "interrupt") to which all the other interrupts are applied. Thus the "power-failure in" signal has a priority that cannot be masked by appearance of any other interrupt signal, a priority that is higher than that of any of the "INT" signals in FIG. **16F**. The PFIN signal initiates a five-millisecond countdown in the central processor, during which time certain critical data and partial results of certain computations are stored in MSM5114-3 working memory units **1802**, **1804** (FIG. **18G**) of the Master Processor Module—which are CMOS-type low-power-drain memory units.

These data are preserved in the CMOS memory **1802**, **1804**, by power from a small backup battery (not illustrated), for a number of hours. During this time the power problem should if possible be corrected. The battery is normally recharged by a few milliamperes of trickle current from ship's power. This current bypasses the input power-switching circuitry in the apparatus, and so is maintained whenever ship's power is available to the apparatus. When ship's power is interrupted the battery can maintain data in the CMOS memory for about ten hours without recharging.

FIG. **16H** simply shows through-cable connections, between the Personality Module, Slave Processor Module, Bus Module, and Power Control & Monitoring Module.

FIG. **17A**–**17D** represents a Bus Module **1700**, which with the data and control bus segments previously discussed (in connection with FIGS. **13A** through **13J**, and FIGS. **15**, **16A** through **16H**) and other segments to be discussed shortly (in connection with FIG. **18**) makes up the bus system **278** of FIG. **10**. The Bus Module shown in FIG. **17** is of a type sometimes referred to as a "backplane"—that is, a circuit board that is positioned at right angles to the other boards in a card cage, and that carries soldered-on connectors into which the other circuit-board modules are inserted, thereby completing interconnections among the other boards.

Most of the present Bus Module **1700** is unused, being reserved for system expansions as they may be conceived and brought into use. Each column of pads **1702** indicated on the Bus Module schematic (FIG. **17**) represents, in effect, a connector set to which a circuit board can make connections. The terminal pins **1704** provided for manual jumpering (FIG. **17A**), permit future use of multiple additional processor modules. The bus priorities among the several processors will be established by a unit provided for that purpose in the Master Processor Module **279**—under control of the jumpers manually installed here. The Bus Module **1700** as presently used makes connections only between two units—the Input-/Output Module **277** (FIGS. **16A**–**16H**), to which it makes contacts through conventional LC1B connector **1706**; and the Master Processor Module **279** (FIGS. **18A** through **18M**), to which it makes connection at column J**1**.

In addition, the Bus Module carries a few circuit components itself. Referring to FIG. **17H**, a DC-to-DC converter **1708**, provides regulated positive and nega-

tive twelve-volt power to the Master Processor Module from the five-volt logic supply. (The latter supply is conventional, and located on a separate power-supply board cabled to a PC1B connector—see FIG. 17C. The five-volt supply itself is not illustrated.) In FIG. 17D is a buzzer **1710**, power transistor Q1, and connections to the buzzer control circuit, previously discussed, on the Input/Output Module **277**. A "false acknowledge" circuit **1712** shown in FIG. 17B is provided primarily for troubleshooting purposes—to simulate acknowledge signals from external output devices **261**, **262**, **263**, etc., and thereby to determine whether a fault is in one of those devices or is internal to the apparatus **270**.

The Master Processor Module **279** (FIG. **10**) is detailed in FIGS. **18A** through **18M**. The data bus that was discussed to some extent in connection with the Slave Processor Module (FIGS. **13A–13J**) may now be seen to be an extension of half of the data and control bus system that is internal to the Master Processor Module **279**. The "address/data" (AD0 through AD7) bus lines, appearing in FIGS. **18A** and **18C**, are "multiplex" lines that carry either data or addressing information, at various times, from the 8088 central processor unit **1800** (FIGS. **18A**, **18B**) to numerous other components within the module.

Data on these eight lines of the bus system are applied to an 8287 data-bus buffer **1806**, shown in the upper right-hand corner of FIG. **18C**, and then transferred via the Bus Module **278** (FIG. **17B**) to the Input/Output Module **277**, where they appear in the upper left-hand corner. The data are again buffered there in the P8287 unit **1626** before passage to the Slave Processor Module **273**, and—after decoding—to the Display Module **272** and the Keyboard Module **271**, as previously described. The address/data bus is also connected to an 8286 data buffer **1808**, shown in the lower right-hand corner of FIG. **18M**, forming a local "data bus" DB0 through DB7 that services the components shown in FIGS. **18E–18F**. It must be understood, however, that data can flow both ways along the paths just recited, and in particular data from the Personality Module (FIG. **15**), or from the 74LS240 memory port **1330** in the Input-/Output Module (FIG. **13H**), can flow back to the central processor unit **1800** in the Master Processor Module (FIGS. **18A**, **18B**).

Similarly, the same signal lines may at different times be used to carry address or control signals—but in this mode of operation the flow is generally unidirectional, the address or control signals being provided by the central processor unit **1800** to other units in the system. When addresses or control signals are carried on this (multiplex) half of the bus, they are generally followed by data; thus it is necessary to provide a "latching" action for the address information so that it is retained and operative upon its target components after the address signals have been removed from the bus itself. This action is provided by 74LS343 address latch **1810** (FIG. **18C**). The latched address bits AB0 through AB7 are held available for whatever components they are intended for, freeing the multiplex half of the bus to carry data.

The multiplex half-bus within the Master Processor Module is also connected to a 8087 mathematical processor **1812**. This math processor is not in use, in the present preferred embodiment, having been supplanted by expanded mathematical processing within the central processor unit **8088**.

The address bit lines AB0 through AB7, just mentioned, pass through a 74LS240 address-bus buffer section **1814** (at the right end of FIG. **18C**), to become ADR0 through ADR7 complement signal lines, which perform the address-bus functions previously noted for the displays and the ROM on the Personality Module. Meanwhile the address bit lines AB0 through AB7 also branch and are shown in FIGS. **18E** and **18G** as applied to the address terminals of the several memory sections appearing in FIG. **18G**.

The other half of the bus system originating within the Master Processor Module starts at output lines A8 through A15 of the 8088 central processor unit **1800** (FIG. **18B**). These eight lines are usable for addresses only. In addition to branching for connection to the math processor **1812**, now unused, these eight lines are applied to another 74LS240 address-bus buffer **1816** (FIG. **18D**), forming complement signal lines ADR8 through DARF, which with the eight output lines of buffer **1814** (FIG. **18C**) complete a sixteen-line intermodule address bus. In addition, the eight addresss output lines A8 through A15 of processor **1800** are applied to a 74LS244 internal buffer **1818**, forming address signal lines AB8 through ABF for control of the 2732A or 2764 programmable read-only memories (PROMs) **1820**, shown in FIG. **18H**. These lines in effect, in combination with the eight complement signal lines ADR0 through ADR7, also complete a sixteen-line address bus.

Eight status signal lines from the central processor **1800** unit are directed to a 74LS373 CPU status latch **1822**—(FIG. **18D**)—which performs for the status lines a function similar to that performed for the multiplex bus lines by the upper latch, as previously described. In this instance, however, the signals for which the status lines are freed are not data signals but simply other status signals. The latched signals are used to generate other complex status signals (utilizing respective 74LS27, 72LS11, and 74LS00 gates, just to the right and up from CPU status latch **1822**). The latched signals are also applied to a third 74LS240 addressbus buffer **1824** (FIG. **18D**), where they are buffered and passed on to the Slave Processor and Display Modules.

Some of these eight signal lines from the central processor **1800** are passed onto 8288 bus controller **1826**, which produces appropriate signals when the central processor is reading or writing via the bus. Some of the same signals also are passed to a **8289** "multiple-processor bus arbiter" **1828**, not in use in the present preferred embodiment but provided—as the extra channels in the Bus Module discussed earlier—for system expansion by addition of other functional microprocessor units. In the event such units are added, the multiple-processor bus arbiter **1828** will resolve priorities as between them—based in part on additional manually applied jumpers **1830**, **1832**, **1834** between the wire-wrap terminals marked "Y," "Z" and "Q" in FIG. **18A**.

An 8284A ready generator **1836**, at left in FIG. **18A**, functions in cooperation with a 12 MHz crystal **1838** shown just above it to provide clock signals for use throughout the system, and also collects various "acknowledge" and "ready" signals from other parts of the Master Processor Module and constructs an overall "ready" signal for passage to the central processor **1800**. This "ready" signal informs the central processor that the system has completed tasks it was previously instructed to perform, if any, and is now ready for reading

or writing of the next item of data or address information on the data/address bus system or status lines.

FIGS. **18E–18H** illustrate primarily the memory system of the Master Processor Module. Two banks of MSM5114-3 random-access memories (RAMs) **1802** and **1804**, respectively, are provided (FIG. **18G**), each bank having four memory chips. The system has already been described whereby the 8088 central processor unit **1800** (FIGS. **18A–18D**) addresses the memories, but the address lines previously described all carry addressing information in numerical location form. Some of the signal lines carrying this data must be decoded to determine which chip is being addressed by the other address signal lines, and to generate high-low "strobe" or "command" signals to the individual chips. Thus, lines AB0 through AB9 call out memory locations in all of the MSM5114-3 RAM individual chips of RAMs **1802** and **1804** (FIG. **18G**), without discriminating among them, and likewise as to the 2732A or 2764A PROM chips **1820** (FIG. **18H**) (taking into account the additional bit lines ABA, ABB and ABC to the PROMs).

The additional decoding step is provided in 74LS139 RAM-select decoder **1840**, at the left end of FIG. **18E**, and in 74LS138 PROM select decoder **1842**, at the bottom of FIG. **18H**. PROM select decoder **1840** selects a RAM chip pair for actuation, subject to inhibition through four MC14071B "AND" gates **1844** when the RAM is in use (by the complement "ramenable" or "RAMENB" signal applied to the decoder) or when the power is too high or low (by the complement "memory disable" signal, at pin **22** of the connector, as discussed earlier in connection with the Input/Output Module, FIGS. **16E–16H**). The two binary bits at lines ABA and ABB are sufficient to specify four conditions, corresponding respectively to establishment of a "high" logic level at any one of the four chip-select lines **4**, **11**, **3** or **10**, from the four MC14071B "AND" gates.

Similarly the 74LS138 PROM select decoder **1842** receives three chip-select signals A0, A1 and A2—sufficient to specify a high logic level for any one of the eight PROM chips.

Depending upon the functional capacity demanded of the apparatus **270**, in its various possible expanded applications, it may be desirable to use either a 32K capacity PROM chip in each of the eight positions—where diagrammed in FIG. **18H**—or a 64K capacity PROM chip in each of those positions. A 74LS157 PROM "size" selector multiplexer **1844** (FIG. **18F**), accommodates the resulting ambiguity in memory locations—and this is the reason for the added signal line to terminal G1 of the 74LS138 chip selector **1842**.

Once the address of a memory location has been called out, the next step is to strobe the memory to read or write, as the case may be. In the case of the PROMs **1820**, in which is stored the program for the 8088 central processing unit **1800**, the strobe line is the complement "MEMREAD" line **1846** (drawn from the lower right of PROMs **1820**). When the address has been established and the voltage on this line is lowered to strobe the PROMs, the next program instruction is read from the PROMs onto data bus DB0 through DB7, where it traverses the 8286 data buffer **1808C** (FIG. **18M**), and then joins the portion of the data bus previously discussed (AD0 through AD7) for transmission to the 8088 central processor unit **1800** on FIGS. **18A–18D**.

In the case of the RAMs **1802**, **1804** (FIG. **18G**), the addressing operation and readout are substantially the same, except that the "read" strobe line is—as is conventional—omitted from the drawing. To write into the RAMs, the addressing is performed in the same fashion as for reading, but the complement "MEMWRITE" signal line **1848** (FIGS. **18E**, **18G**) rather than the "read" line, is brought low to enable writing into the RAMs; data from the same data bus is then applied to the RAMs for storage.

Most of the components shown in FIGS. **18I–18M** are devoted to internal "housekeeping" functions, the only exceptions being 8286 data buffer **1808** (FIG. **18M**) and an 8231 math processor **1850**. Data buffer **1808**, as previously mentioned, is positioned at a point where the multiplex half-bus AD0 through AD7 becomes devoted more exclusively to handling data. Math processor **1850** is provided to perform certain computations that require special machine-language programming for execution in reasonable time—such as small-argument arctangents and other transcendental functions.

Most of the other circuitry shown in FIGS. **18I–18M** is related to the prioritization and management of the "interrupts" mentioned earlier in connection with the Input/Output Module (FIG. **16F**). The various externally generated interrupt signals are collected at pins **57** through **64** of the Master Processor Module connector strip **1852**, along the left edge of FIG. **18I**, and are inverted and applied to wire-wrap pins **1854** (V) (FIG. **18I**) and **1856** (W) (FIG. **18J**).

Other interrupts, generated internally by the program, are applied to a 74LS175 interrupt register **1858** (FIG. **18J**), where one four-bit word represents the status of four interrupts. The bits in this register are simply held until used. The output lines from 74LS175 interrupt register **1858** are applied to wire-wrap pins in **1860** (X) (FIG. **18J**), along with other interrupts from others points within the Master Processor Module, as shown.

An 8259A programmable interrupt controller (interrupt counter) **1862** (FIG. **18I**) has as its inputs eight prioritized lines IR0 through IR7, and five other lines (INTA, CS, RD, WR, A.0) that also function as interrupts. Coordinating and prioritizing all of these inputs signals, interrupt counter **1862** generates an output "interrupt" signal only when no higher-priority interrupt is already in effect. The relative priority of the externally generated interrupts and the internal, program-generated interrupts mentioned previously is determined by manual strapping. The strapping is custom-applied between the previously mentioned wire-wrap pin sets V, W and X and the pin set **1864** (U) FIG. **18I**) that is connected directly to the input terminals of the interrupt counter. Here again, of course, proper application of external jumpers at these terminals requires a thorough understanding of the significance of the interrupt structure and the requirements of the external apparatus involved.

As previously mentioned, the "interrupt" signal from the interrupt counter is applied to the 8088 master processor unit **1800** (FIGS. **18A**, **18B**), where any arriving interrupt signal is treated as a "maskable" interrupt—in that it may be overridden, or "masked," by an interrupt of higher priority as determined in the interrupt counter. Also applied to the master processor unit is a "nonmaskable interrupt" signal (NMI), which overrides any of the interrupts processed through the interrupt counter. As also previously mentioned, the NMI signal

is generated by the overvoltage and the undervoltage sensing circuitry **1630** in the Input/Output Module (upper right in FIG. **16G**).

An 8253-S programmable interval timer **1866** (FIG. **18F**) (periodic interrupt timer) receives from the 8284A master clock **1836** 8284A (left end of FIG. **18A**) either a 4 MHz or 2 MHz clock signal (selected by manual strapping at wire-wrap pins (S), shown at left center of FIG. **18F**), and generates periodically a complement "time interrupt" (TIME INT) signal. This signal, applied to terminal **4** in the wire-wrap pin set **1856** (X) (FIG. **18J**), is used to announce when certain regularly scheduled processes should be initiated—such as, for instance, the updating of position by dead reckoning.

Such interrupts will generally be assigned a very low priority, since they can be effectuated a few milliseconds or even seconds late without adverse result. The periodic interrupt timer obtains its complement time-interrupt output signal (TIME INT) by dividing down the input clock signal; it is accordingly easy to use the same timer to produce another necessary divided-down signal, the complement "baud clock" signal at terminal OUT2, which establishes a character-transmission rate for communication of data between the apparatus **270** (FIG. **10**) and external devices **251, 252, 253, 261, 262, 263**, etc.

Referring now to FIG. **18L**, an 8288 bus controller (system controller) **1870** receives various status signals from the central processor unit. Bus controller **1870** commands the other components in the Master Processor Module to read or to write into or from input or output devices (note the complement signals IOREAD and IOWRITE), or into or from memory (note the complement signals MEMREAD and MEMWRITE). Bus controller **1870** also generates a local interrupt (complement signal INTA) when required to avoid certain kinds of priority conflict not handled by the interrupt counter. In particular, the 8288 system controller **1870** receives a "local access" signal from a group of 74LS00, 74LS04, 74LS20, and 74LS32 gates, generally indicated as **1872**, drawn just below it. These gates generate the local-access signal to inhibit operation of the system when conflicting uses of the bus would otherwise occur—such as, for instance, in using the bus to communicate with memory-mapped input-output devices and at the same time with the internal RAMs or PROM in the Master Processor Module.

A 74LS139 decoder/multiplexer (internal-memory-mapped-device selector) **1874** is also provided. Whereas the various input and output devices previously discussed are "mapped" into memory locations by "port control" units **1316** (FIG. **13E**) and **1318** (FIG. **13B**) in the Slave Processor Module (**273**), the apparatus also "maps" into memory locations the data terminals of certain components that are internal to the apparatus, but not actually memory modules as such. The 74LS139 internal-memory-mapped-device selector **1874** generates signals that select these internal nonmemory devices for communication on the data bus. The control signals for this purpose are shown at complement lines "SELECTPIC" (select 8259A programmable interrupt counter **1862**), "SELECTMPU" (select 8088 master processor unit **1800**), "SELECTPIT" (select 8253-A programmable interrupt timer **1866**), and "SELECTINT" (select 74LS175 interrupt register **1858**).

FIG. **19** illustrates the circuitry in the Power Control & Monitoring Module, **289** in FIG. **10**. Ship's power is first applied across diode **CR1**, provided to protect the apparatus by blowing a fuse if the supply voltage is of incorrect polarity. Zener diodes **VS1, VS2, VS3**, capacitors **C1, C2** and **C3** and inductor **L1** form a spike filer, to protect the apparatus against high-voltage transients from the supply. A protected but unregulated twelve-volt supply is cabled to the Input/Output Module via pins **2** and **9** of connector **PC3**.

This voltage is also supplied to power switching relays **K1** and **K2**, which respectively are controlled by signals at pins **4** and **1** from the previously discussed lamp- and supply-control circuits in the Slave Processor Module (FIG. **13G**). The output voltages of these power relays are cabled at connector pins **3** and **8** to the projection-lamp socket, and at pins **5** through **7** to the regulating circuitry in the Slave Processor Module (FIG. **13J**) and elsewhere in the system.

4. OPERATION

As pointed out above in detailed-description subsection 1, "External Features," the preferred embodiment of the present invention has a hierarchy of capabilities that are conveniently described as "mode" and, within each mode, "functions." Some characteristics of the modes and functions have already been presented in the earlier subsection, and the hardware required to implement the modes and functions has also been described, in subsections 1 through 3. Since parts of the hardware, however, are programmable microprocessors, much of the detailed implementation is embodied in programs. Subsection 5, which follows, presents the structure of the programming. This subsection 4 provides a bridge between the hardware and program structures, by describing some of the things that the apparatus is expected to do under various conditions.

a. Use of the "function" key

The "function" key **38** (FIG. **2**), as noted earlier, changes the implication of most of the other keys on the control panel **14**. These changes may be grouped into three categories: (1) changes in the functions produced by the MANL/LOAD and DEST/PP keys **49** and **48**; (2) changes in the functions produced by the display keys **32** through **36**; and (3) changes in the implication of the numeral keys **37**.

The first of these categories has already been introduced, in subsection 1. To load a map, if the overall power to the apparatus and the power to the projection screen are both turned on, the operator presses the "f" key **38** and then the MANL/LOAD key **49**—thereby calling up the "LOAD" function of the latter key. The displays **31** present the words "PLEASE WAIT" and the map transport mechanism moves the map carriage **143–148** (FIG. **5**) toward its loading position, adjacent the slot **13** (FIG. **1**) in the left side of the upper case section **12**. The operator removes any map (in its mount) that may be in the carriage, inserts a desired map (in its mount) into the carriage, and presses the ENT key **42** (FIG. **2**) to indicate that the new map has been loaded. The displays **31** then indicate "INITIALIZE CHART", and the N, S, E and W lights (on keys **43**) all glow to indicate that manual direction of the map transport mechanism is enabled.

The operator touches the E key continuously, for about ten seconds, while the map moves well into the housing and until the left edge of the projected map appears on the screen. The operator then touches the S key continuously until the upper left corner of the map appears on the screen. By manipulating the direction

keys **43** the operator positions a corner target on the map precisely under the crosshairs **16** on the screen, and then presses the MARK key **44**. The operator then again touches the S key continuously until the lower left corner of the map appears on the screen, manipulates the direction keys **43** to position a second corner target in that corner precisely under the crosshairs, and again presses the MARK key.

The Master Processor and Slave Processor Modules **279** and **273** (FIG. **10**) now have enough information to determine the chart's precise position—particularly including rotation relative to the vertical crosshair on the screen (which should be precisely parallel to the vertical tracks **135** of the transport mechanism, FIG. **5**). The processors now should be able (with suitable programming, of course) to translate any latitude-longitude data into vertical and horizontal drive-motor (**137** and **151** in FIG. **5**) step numbers, and vice versa.

The display then indicates "CHART NO." and the numeral lights (on numeral keys **37**) all glow, indicating that the apparatus is ready to accept numerical entries. The operator enters an identifying number for the map, reading the number from the lower left-hand corner of the screen. It is preferred to program the apparatus so that it recognizes the standard NOAA system of chart numbers, and a specially assigned six-digit number for foreign charts.

The procedure now branches, depending upon whether the particular map now in the apparatus has been used before, and on whether certain data are stored in the memory within the apparatus. If these data are not already stored, the display indicates "L1? DDD MM.MM". At the lower left corner of the chart, appearing on the screen, are four numbers labelled **L1**, **L2**, **L3**, and **L4**. These values are the latitude and longitude of the upper right and lower left corners of the chart, respectively, given in degrees, minutes and hundredths of a minute. The operator keys in the data for position L1—copying the degrees and minutes exactly as called for on the display. The operator then checks that the keyed-in data as displayed agree with the information on the chart—and, if not, touches the CLR key **41** and repeats the attempt.

When agreement is obtained, the operator touches the ENT key **42** to enter the keyed-in data in the portion of the apparatus memory reserved for chart data. The display then requests "L2? DDD MM.MM", and the operator responds similarly with the data for the second value. This cycle is repeated until the entire sequence of four points in sequence has been entered.

The display now indicates "CALIBRATED," and the mode lights (on keys **45** through **49**) light, indicating that the apparatus is ready for the next procedure. The apparatus has stored the calibration points with their corresponding chart number for future reference. The apparatus stores data for up to ten charts. Therefore, as long as the backup battery has not run down, the operator will not have to enter the calibration data again—only the chart number. If the ten-chart memory is already full, the display indicates "TABLE FULL," but operation can proceed with this (eleventh) chart in a temporary memory position. Alternatively, the operator can substitute the data just entered in place of the data, already in the permanent memory, that correspond to another chart—one that will not be used soon. This procedure will be described shortly.

The display then indicates "VARIATION." The operator enters the degrees of magnetic variation (generally finding this information on the chart itself) for the operating area, and touches the ENT key **42**. The display now indicates "EAST OR WEST", and the E and W lights glow, indicating that the E and W keys are active for keying-in of the direction of the variation. When this information has been keyed in correctly, as verified at the display, the operator again touches the ENT key. The variation information is stored with the other chart-calibration data corresponding to the chart now in the apparatus; however, the operator must take care to change the variation value if the craft moves to a part of the map where variation is significantly different. (This will of course be necessary only for relatively small-scale charts.)

If any calibration or variation data are entered incorrectly, and the error is such that the apparatus is unable to calculate the internally used constant values that it uses during operation, the message "CHART TOO BIG", or "OUT OF RANGE", or "VARIATION TOO BIG" appears on the display and the corresponding steps must be repeated correctly—by touching the "f" and MANL/LOAD and ENT keys in sequence and reentering the data without error. During all of these data-entry steps the apparatus continues to update the craft's present position in whatever mode was previously in operation, although of course the chart display is not visible.

Taking up the other branch of the map-loading procedure, if the calibration data for the map that is now in the apparatus have already been loaded into the memory, then the apparatus recognizes the chart number and skips all of the data-entry interrogations. The two branches of the procedure now reconverge.

If the apparatus was operating in a DR or Loran mode before the new chart was installed, and if less than ten minutes have elapsed during the chart installation, and if the present position is in fact on the new chart just loaded, then the operator can touch the DR track or LORAN key **46** or **47** to cause the apparatus to automatically position the new chart and continue tracking. If more than ten minutes have elapsed, the present-position track is cancelled and a new position must be established—either automatically by Loran fix or manually by entry of a bearing fix or the last available DR position.

Still within the first category of three "f" key uses enumerated above, the effect of touching the "f" key and then the DEST/PP key **48** has already been described adequately in subsection 1, "External Features."

The second category, use of the "f" key in conjunction with the display keys **32** through **36** has already been introduced in subsection 1, but some additional discussion will be presented here.

Under certain circumstances direction and speed, or set and drift, or both, must be entered manually. At this point the discussion will digress briefly to explain what determines the necessity for manual entry of these quantities. Generally, direction and speed need not be entered manually when automatic sensors for these quantities are attached; and set and drift need not be entered manually when a Loran receiver is attached. In addition, manual entry of set and drift can sometimes be avoided when bearings fixes are taken—to be used by the apparatus in calculating set and drift. The reasons for these statements may be understood from FIG. **20**, which illustrates the relationship between three pairs of parameters: (1) direction (or "course" or "heading") steered, and speed through the water, (2) set and drift,

and (3) course made good (CMG) and speed made good over the ground. (It is to be understood that this discussion applies equally well to aircraft, with the necessary minor changes in terminology.)

FIG. **20** represents each of these pairs of parameters as a vector quantity. The heading-and-speed vector **321** is a vector quantity whose magnitude is proportional to the craft's speed (e.g., as suggested in the drawing, 10 knots), and whose orientation is parallel to the heading (e.g., 80 degrees clockwise from north). This vector represents direction and speed of the craft relative to the body of water through which the craft is moving. The set-and-drift vector **323** is a vector quantity whose magnitude is proportional to the speed of the body of water (e.g., as shown, 3 knots), and whose orientation is parallel to the motion of the body of water (e.g., 140 degrees). This vector represents direction and speed of the water relative to the ground which is beneath the water. The vector sum is 322, which therefore represents the direction and speed of the craft relative to the ground—that is, the CMG, course made good (e.g., 11.8 knots) and speed made good (e.g., 93 degrees) over the bottom.

From any two of these vector quantities the third may be calculated—and such calculations are in fact performed by the apparatus when input information is sufficient to establish any two sets of values. (The necessary equations are set forth in subsection 5, below.) Five cases will be described.

1. If set-and-drift vector **323** and heading-and-speed vector **321** are both entered, the apparatus will calculate the CMG vector **322**—and this quantity will be accumulated and output as the DR track, which controls the map transport mechanism to graphically display DR-computed present position.

2. If the heading-and-speed vector **321** is known and the CMG vector **322** is measured by the operator over a relatively short distance—by taking bearing fixes, and entering the bearing-fix data into the apparatus—the apparatus will compare (a) the dead-reckoning prediction from the heading-and-speed vector **321** with (b) the established CMG vector **322** to find (c) the discrepancy vector **323**, which it will attribute to set and drift.

3. If the set-and-drift vector **323** is estimated and input to the apparatus, and the CMG vector **322** is measured over a short course by entering bearing-fix data as in the second example, the apparatus could in principle calculate the heading-and-speed vector **321**. In practice this case would seldom be useful as such and is therefore not implemented.

4. If the course-made-good vector **322** is set equal to the desired track to a particular way point, the set-and-drift vector **323** is known, and the present speed is known, then the necessary heading-and-speed vector **321** is calculated by the apparatus and from that value the necessary heading is found. The heading is displayed (or directed to an autopilot) as "course to steer."

5. Combining calculations 2 and 4 above, if the set-and-drift vector **321** can be determined by measurements over a short distance, as in calculation 2, then the set-and-drift vector **321** can be regarded as known for the purpose of calculating "course to steer," as in calculation 4. If the two-step process is then repeated at regular intervals, continuously resetting the "course to steer" to accommodate changes in the short-distance determination of (1) set and drift and (2) speed, then the actual track will closely approach a straight line, approximating the desired course to be made good to the way point.

The closer together the bearing fixes are obtained, in the compound calculation 5, the more closely will the actual track approximate the desired course to be made good. It is for this reason that it was stated above that manual entry of set and drift can sometimes be avoided when bearing fixes are taken; the only constraint is the availability of bearing points on which to take fixes.

When a Loran receiver is attached and in use, within the part of the world where the Loran system is in place and operating, the constraint of bearing-point availability is removed. Loran fixes can be taken at very frequent intervals, permitting updating of the set-and-drift vector **323** and revising the desired course-to-be-made-good vector **322**, so that the "course to steer" or heading aspect of the heading-and-speed vector **321** can be frequently reoriented and the actual CMG vector **322** will very closely approximate the desired one. It is for this reason that it was stated above that set and drift need not be entered manually when a Loran receiver is attached. This topic will be considered further in parts e and f below.

When only one of the three vectors is known, the other two are indeterminate. For example, suppose that bearing fixes are obtained over a short distance, to actually measure the CMG vector **322** for that distance, but that no set-and-drift or heading-and-speed data are provided to the apparatus. The CMG vector **322** calculated by the apparatus will then have incorporated within it the effects of both the set-and-drift vector **323** and the heading-and-speed vector **321**, with no means of separating the two effects. This indeterminacy might at first seem unimportant, but it is actually very undesirable because it prevents determination of a "course to steer" that compensates for set and drift. Thus, even a rough estimate of one of the two vectors **321** and **322**—whichever is available with greater accuracy—is somewhat preferable to none.

These relationships establish the circumstances under which heading-and-speed and set-and-drift information must be entered manually. With these relationships in mind, the discussion now returns to the mechanics of data entry. When course and speed are to be entered the operator touches the "f" key **38** and then the DIR/-SPEED key **32**, and the numeral lights (on keys **37**) glow to indicate that the apparatus is ready for the entry of numeric data. Further, the displays **31** "request" course-and-speed data, indicating the necessary format, by the same sort of colloquy as described above for map-calibration data. When set and drift are to be entered, the operator similarly touches the "f" key **38** and then the SET/DRIFT key **33**, and the numeral lights (on keys **32**) glow while the displays "request" set-and-drift data.

Whenever the apparatus is relying upon the operator for either course and speed or set and drift, it is essential for the operator to be aware of the necessity to enter any changes in any of these four parameters—course and speed from his visually read compass and knotmeter, or from estimates; and set and drift from a chart or from estimates.

To enter latitude and longitude numerically, the operator touches the "f" and LAT/LONG keys **38** and **34** in that order, along with either the DEST/PP key **48** (to indicate that it is the coordinates of the destination that will be entered) or sometimes the combination of the "f" and DEST/PP keys in sequence (to indicate that

it is the coordinates of the present position that will be entered). The latter keystrokes are unnecessary if the apparatus is already in its "normal" condition of displaying and accepting present-position data.

The displays **31** will then "request" the appropriate coordinates in format, by a series of indications analogous to that described above for map calibration. If the operator enters no direction for latitude or longitude, north and west respectively are entered automatically by the apparatus. If this results in a position that is incompatible with the chart in use, the display indicates "OFF CHART" to prompt the operator to correct the entry.

By numerical entry of latitude and longitude the operator can locate for the apparatus any point that is either on or off the currently loaded chart. Alternatively, for points that are on that chart, the direction keys can be used to align the point of interest directly at the crosshairs, and the MARK key **44** can be touched to identify the particular point for the apparatus—which can convert the position of the map transport mechanism to latitude and longitude.

The numerical entry method and the "mark" method are both available for entry of present position, way points, destination, or navigational bearing points such as buoys and lighthouses. Navigational bearing points (as explained in part d below) are entered only in the "bearing fix" mode, and are identified as such by the fact that the apparatus is being operated in that mode. It is therefore unnecessary to provide a "bearing point" function key as such. As will shortly be described, an entire table of coordinates for present position, destination, and way points can be entered into the apparatus for storage and for use in calculations; when this operation (function) is in progress, the distinctions between these various types of points are inherent in the procedure, and it is therefore not necessary to use the DEST/PP key to discriminate among them.

In Loran operation, the apparatus automatically calculates time-different (TD) equivalents for any latitude-and-longitude combination that is significant to the Loran calculations or is to be displayed. It is therefore usually unnecessary to enter TDs manually; however, in some situations the operator may know the TDs but not the latitude and longitude. Accordingly the apparatus is programmed to accepts the TDs instead of the coordinates, and perform the reverse translation to derive the coordinates where needed. In short, the apparatus is "fluent" in both coordinate language (when the LAT/LONG key **34** is touched) and TD language (when the GRI/TD key **35** is touched), and will either accept or display information (depending upon the function being performed) in either language.

To enter a new group repetition interval the operator touches the "f" key, then the GRI/TD key, and then the numeral keys as required—and as prompted by the displays **31**, in a manner similar to that described earlier for map calibration. To enter TDs manually, when that is desired, the operator must identify the point as present position, destination, way point, or bearing point—either by use of the DEST/PP and "f" keys **38** and **48**, or by entering the bearing-fix or destination-and-way-point-table function, as mentioned above for entry of latitude and longitude.

The third category of uses of the "f" key, as stated at the beginning of this part a, is changes in the implication of the numeral keys **37**. When the operator touches the "f" key and then certain numeral keys, the apparatus initiates certain functions for which no specific display or control key has been provided. These functions are generally operations that are performed relatively infrequently, or in some cases operations that are actually a formatted series of suboperations (to obviate the necessity for the operator's memorizing an entire formatted series). The functions of this type that are used in the preferred embodiment of the invention are listed below, along with the numerals used to initiate them. It will be apparent that a great many variations on the listed functions—and of course on the numbers that call them up—can be conceived, without deparing from the spirit or scope of the invention.

Keying in "f," then "**0**" (zero), and then "ENT" initiates the "enter present position" function. (The key series may be specified more succinctly as just "**f0** ENT"; this format will be used without explanation for the following functions described.) In this operation the operator enters present known position into the apparatus. The apparatus will use the entered value for future DR, for initial calculation of "course to steer," for calculation of estimated arrival time at and distance to the next way point, and for calculation of TD local error (as described below in regard to "**f54**").

Latitude is entered and displayed in this operation (and in the situations previously discussed) with two digits for degrees, and with two digits, a decimal point, and two more digits for minutes and decimal fractions of minutes. The display also includes an N or S for north or south; in entry of data these designations are keyed in using the direction keys **43**. Longitude is entered and displayed similarly, except that three digits are presented for degrees, and of course an E or W for east or west. The numeral and direction lights (on numeral and direction keys **37** and **43**) glow when the "**f0**" function requires their use to enter information. A prompter symbol (*) appears in the display to indicate digits called for but not yet entered.

If the present position is shown on the map that is in the apparatus, the operator touches "**f0** ENT," then MANL/LOAD (the direction lights glow), and then the direction keys to move the present position directly behind the crosshairs on the screen. Then the operator touches MARK—and the apparatus records the corresponding latitude and longitude, identifying them with the craft's present position. If preferred (or if the present position is not on the map that is in the apparatus), the operator touches "**f0** ENT," then LAT/LONG (the numeral lights glow), and then the appropriate numeral keys to enter latitude and longitude in format. The direction lights glow, and the operator touches N or S and E or W as appropriate to complete the data format. The operator then touches ENT to enter the keyed-in data, and proceeds to the next operation or to initiate a particular operating mode, as desired. (The same result can be achieved using the "f" and LAT/LONG keys, and if necessary the "f" and DEST/PP keys, as described earlier, but the "**f0**" function helps the operator to be certain that what is accomplished is what is intended.

Keying in "**f1** ENT" initiates the "enter destination and way points" function. In this sequence the apparatus prompts the operator to enter locations for destination and/or as many as nine way points. The apparatus will use these data for calculation and updating of "course to steer," estimated arrival time and distance to the next way point. The latitude and longitude are entered either numerically (in the same format described

for "f0") or by use of the MARK key, as before. Way points, in the order in which they will be traversed, are numbered from zero up, the destination being assigned the last number. For example, five way points would be numbered from zero to four, and destination would be point number five, the apparatus of course simply treating the destination as the sixth point. A way point or the destination is called out, in this function, by its assigned number when the operator wishes to display its latitude and longitude for any reason—including a decision whether to keep it or change it.

The procedure for use of this function is as follows: The operator touches "f1 ENT." The displays **31** indicate "WAY PT NO?" The operator keys in any numeral from **0** to **9** and then touches the ENT key. The displays **31** then indicate latitude and longitude for the correspondingly numbered point. To keep the same latitude the operator touches ENT; to keep the same longitude the operator touches ENT again. To change either figure by numerical entry, the operator keys in the data as described for the "f0" function, touching ENT to enter the new value in place of the displayed value (if any). If it is preferable, the operator can instead touch the GRI/TD key **35**, and enter the Loran TDs for the point of interest. If the point is on the map that is in the apparatus, the operator can use the alternative procedure of touching MANL/LOAD, then the direction keys to register the point with the crosshairs, and then MARK to enter the location. The operator can then key in any other numeral from **0** through **9**, followed by the ENT key, to review and/or revise any of the other stored points of interest, or to add new ones beyond the original table.

Keying in "f2 ENT" initiates the "current set and drift" function. In this operation the apparatus prompts the operator step by step through a procedure for entering set and drift—determined by the operator from charts or other sources external to the apparatus. The apparatus will apply these data as corrections to ship's heading and speed for accurate DR tracking, for advancing of lines of position (to be explained below) in the bearing-fix mode, and for calculating set-and-drift-compensated "course to steer."

Although usually described as the direction and velocity of currents in the medium (air or water) through which the craft is moving, set and drift in maritime applications should be described more precisely with reference to the combined effects of wind and current. If set and drift are calculated by the apparatus, from either Loran or bearing fixes or from known positions, the offsetting influences of wind and current cannot be separated in the resulting data. For manual entry, however, the operator should take account of both wind and current, using values obtained externally or estimated as accurately as possible.

The operator can obtain values of set and drift for tidal currents from tidal-current tables, diagrams and charts published by the National Ocean Survey; and for ocean currents from pilot charts and pilot-chart atlases published by the Defense Mapping Agency Hydrographic Center (DMAHC). In addition, the operator should consider abnormal tide and current conditions and of course local wind conditions in the entered set and drift values. Especially when entering or leaving tidal-current areas, it is essential to use updated values of set and drift to avoid gross errors in DR and in the advancing of bearing-fix lines of position. Drift is to be entered in knots; when using data from charts and atlases that show drift in nautical miles per day, the operator must divide such data by twenty-four before entry.

The procedure for function "f2" is as follows. The operator touches "f2 ENT," and the displays indicate "SET XXX," where "XXX" is the previously entered value, if any, of the set—in degrees clockwise from north. The operator either touches the ENT key to keep the value XXX, or touches the appropriate numeral keys **37** and then the ENT key to enter the direction of the known or estimated set. The displays **31** then indicate "DRIFT YYY," where "YYY" is the previously entered value, if any, of the drift—in knots. The operator touches ENT to keep the value YYY, or uses the numeral and ENT keys as before to enter updated value in knots; this use of the ENT key also completes the "f2" function and the operator can proceed to the next operation or mode desired. (The same result can be achieved using the "f" and SET/DRIFT keys **38** and **32**, but the "f2" function helps the operator to be certain that what is accomplished is what is intended.)

Keying in "f50" initiates the "compass damping" function. This operation adjusts the amount of weighted averaging automatically applied by the apparatus to heading values successively received from the ship's compass, if any. The averaging or "damping" is used to smooth or steady the compass signal, to minimize the erratic fluctuations due to yaw. The amount of yaw varies considerably—between slight, in calm waters, and great, in heavy seas. The exact effect depends on ship design, helmsman skill, shape and frequency of swells, etc. The amount of damping must be varied correspondingly.

The apparatus of the preferred embodiment applies damping in different degrees, identified on a scale of zero to nine (light to heavy damping). When the apparatus is first powered up, damping is automatically preset to five. The apparatus is to be set by the operator to light-damping values when there is very little compass swing, or in particular when it is necessary for the DR track to follow course changes very closely (for example, within a half-minute). The apparatus should be set to heavy-damping values when the compass swings are wide and irregular. The compass signal can be observed, to determine the degree of damping desired, by touching the DIR/SPEED key **32** while the apparatus is in the DR or Loran mode.

The procedure is simple. The operator touches "f50 ENT"; the displays indicate "CMPS DMP X", where "X" is the damping value previously set; and the operator touches either (1) the ENT key, to keep the preset value X, or (2) a numeral key and then the ENT key, to change the setting and complete the f50 function.

Keying in "f51 ENT" initiates the "speed damping" function, which smoothes the automatic input from the "ship's log"—that is, the knotmeter. Like compass damping, the speed damping applied by the apparatus is a weighted averaging of values successively received. The damping is applied in varying strengths designated from zero (lightest) to nine (heaviest). The apparatus automatically sets its own speed damping to five at power-up. The operator can control the effects of speed variation-caused by pitch of the craft at sea, by adjustment of the speed damping factor.

The need for this adjustment will vary even in heavy seas, depending upon ship design, heading relative to the direction of wave motion, wave height, and so forth. Strong damping will be particularly essential in heavy seas, especially when swells are from ahead or

following; light damping will be in order in light seas and particularly when the DR track should respond accurately and quickly to speed changes arising from maneuvering.

To assess the need for speed-damping adjustment, the operator touches the DIR/SPEED key and observes the averaged knotmeter reading. If this value is changing rapidly or excessively, the operator keys in "**f51** ENT"; the display reads "SPD DMP X," where "X" is the damping value previously set, and the operator touches either (1) the ENT key, to keep the preset value X, or (2) a numeral key and then the ENT key, to change the setting and complete the **f51** function.

Keying in "**f52** ENT" initiates the "variation maintenance" function. In this operation the apparatus prompts the operator to update the stored value of magnetic variation, to a value that is appropriate for the region in which the craft is operating. This variation value is automatically applied by the apparatus to magnetic compass headings and bearings, unless the operator specifically indicates (see "**f91**" and "**f92**" below) that the correction is not applicable.

Compass variation is the difference between the direction given by a magnetic compass—after correction for deviation (see "**f93**" below)—and the true direction. Variation is caused by the fact that the earth's magnetic lines of force are not aligned with the meridians of longitude, but rather, in general, run at angles to the meridians. A magnetic compass, of course, is subject to the corresponding misalignment. The error angle or "variation," in degrees clockwise from true north, is thus essentially constant (subject generally to a slow, perennial drift of the variation value) for any given region.

The preferred embodiment of the invention corrects for variation—if the operator enters the local variation angle—by adding easterly variation or subtracting westerly variation to obtain the true direction. The values of variation are shown on DMAHC chart number **42**, "Magnetic Variation Chart of the World for 1975." For small areas, variation and its annual rate of change are shown on the compass rose of navigation charts. The present value should be calculated using the annual rate.

Where there are significant local irregularities in magnetic force lines, within the area covered by a single chart, the compass rose appears in several locations on that chart. As described above in relation to the chart-loading operation, an initial value of variation for the region of interest is entered into the apparatus in conjunction with the calibration data for the chart. Even while using the same chart, however, it may be necessary to revise the variation setting, as follows.

The operator keys in "**f52** ENT"; the displays indicate "MAG VRY XXX," where "XXX" is the previously entered value, if any; the operator then touches either (1) the ENT key, to keep the same value XXX, or (2) numeral keys, and one of the direction keys E or W, and finally the ENT key, to enter the value and complete the **f52** function.

Keying in "**f53** ENT" initiates the "chart table maintenance" function. This operation prompts the operator step by step through a procedure for removing or replacing chart-data sets previously entered in the apparatus memory. The procedure for entry of chart number, calibration data and variation value has already been described; the "**f53**" function simply represents a way of systematically eliminating the data that correspond to a particular chart—to make room for data relating to a different chart. Although the apparatus holds data sets for as many as eleven (counting the temporary memory) charts at a time, in some situations a craft changes operating regions or for some other reason incurs a change in the pattern of frequently used charts. Such changes can require a shifting of the "memorized" chart-data sets.

This **f53** function is typically initiated by the operator at the point in the chart-loading procedure (described earlier) when a new chart-data set has been loaded into the temporary memory and the displays have indicated that the permanent memories are full. To review the collection of chart-data sets that are filling those memories, the operator keys in "**f53** ENT." Depending on the type of chart that is first in the "table" or "list" within the apparatus, the display indicates "DELETE XXXXX?" or "DELETE YYYYYY?"—where "XXXXX" is a five-digit United States NOAA chart number, and "YYYYYY" is a six-digit foreign chart number. The apparatus is inquiring whether the operator wishes to delete the corresponding chart data from the stored table. These data, of course, are related to only one of the ten charts for which data are stored in the apparatus. The operator may therefore prefer to leave this particular data set in the memory—or may prefer to review all of the other charts in memory first, to see which charts' data set it would be least inconvenient to erase. If this is the case, the operator can answer "No" to the inquiry, by touching the "N" key **40** and then the ENT key **42**.

The display then indicates a similar query for the next chart in sequence, and this series of operations can be continued until the operator reaches a chart number that is acceptable to erase, or until the entire ten-chart table has been reviewed (in which case the operator can start the process again by repeating the entry "**f53** ENT"). When the apparatus displays a chart number for a chart that the operator considers dispensable (relative to the new one in temporary memory), the operator answers the display query by touching the "Y" key **39**—which deletes the data set for the selected chart, and substitutes the data set (if any) standing in temporary memory.

Keying in "**f54**" initiates the "TD offset" function. This function enters a constant adjustment value to be applied to Loran TDs, when the apparatus calculates a position fix. The apparatus is preprogrammed to automatically apply generally known corrections for certain sources of Loran error—"secondary phase factor" (SF) and "additional secondary phase factor" (ASF). If, however, the operator has dependable information concerning additional errors, such as local variation in ASF, or other errors arising from local conditions, the operator should total these errors and enter the total as a correction to the received TD values.

One way to determine such errors very exactly is to compare the received values with the theoretical values at a known location. Present position may be exactly known from a chart location, such as a mooring or buoy alongside. This location fix is of course independent of any TD errors, and the corresponding theoretical Loran TD values can be determined by using the GRI/TD key **35** as previously described—with the apparatus in the DR mode.

By comparing these theoretical TD values with the TD values displayed in the Loran mode, the operator can determine the extent of any error in the received

Loran signal. Such an error, as suggested above, can arise through a local variation in the additional secondary phase factor caused by a local physical peculiarity of the area, or through an imperfection in the receiver. The delay may amount to only a fraction of a microsecond or could be as large as several microseconds, although applicable only within a small area in the immediate vicinity of the known position. If the operator notes this discrepancy and wishes to improve the accuracy of the position computation in the local area, he or she may apply a correction by entering the number of microseconds, positive or negative, in the "**f54**" function.

Another situation in which the "TD offset" or "**f54**" function may be used is the coordinated operation of several craft—as, for instance, during search and rescue operations. Loran receivers on the different craft often read out different values for the same point, leading to failures of complete area coverage or even to accidents. The corrective procedure is analogous to synchronizing watches. Each operator, reading the display of an apparatus (i.e., the preferred embodiment of the invention) aboard his or her own craft, enters TD offsets that bring the TDs on all the apparatuses into agreement.

The procedure follows. The operator keys in "**f54** ENT". The upper display indicates "TD **1** ASF," to invite entry of an additional secondary-phase-factor increment or offset, for the first TD that is output from the Loran receiver. The lower display indicates the offset value, if any, previously entered. The operator touches (1) the numeral keys **37**, then the + or − key **39** or **40**, and then the ENT key **42**, to enter a new TD offset calculated to bring the TD display in Loran mode to the desired value, or (2) the CLR key **41**, to remove the previously entered offset, if any, without substituting any new value, or (3) the ENT key to retain the previously entered offset value. The displays then will indicate "TD **2** ASF" and an offset value for the second TD. The operator responds similarly to this information, and may if desired proceed in the same way for all the available TDs of the GRI chain that is in use; the operator then presses the ENT key twice to complete the **f54** function. While it is possible for the operator to determine correct Loran TDs for all the stations in the GRI chain, and to key in offsets for all of the TDs, it will generally be satisfactory to correct only those two TDs that the invention apparatus is selecting for use in the local area—since, outside that area, the offset values may well be inapplicable anyway.

Keying in "**f55** ENT" initiates the "automatic log interval" function. This operation commands an immediate printout and continuing subsequent periodic printouts of position, date, and time, at an optional printer—if one is attached to the invention apparatus—and invites the operator to revise the frequency of automatic printout. The apparatus is set, when it first powers up, to produce hourly printouts. An immediate printout at the recorder, without disturbing the periodic printout, can be obtained using the operating controls of the recorder.

The operator keys in "**f55** ENT"; the display indicates "PERIOD AA MIN," where "AA" represents any previously entered number of minutes (with a maximum of two digits), or is 60 if no value has previously been entered. The operator then touches either (1) the ENT key, to retain the present printout period, or (2) numeral keys (a maximum of two digits) and the ENT key, to revise the period. The first printout in the periodic series (as newly established) occurs as soon as the ENT key is touched. To end the printout series, the operator keys in "**f54** ENT CLR."

Keying in "**f90** ENT" initiates a "memory maintenance" function. This operation leads the operator step by step through a series of data presentations and queries which are actually the same as five other functions, taken one after the other: **f91**, **f92**, **f93**, and **f94** (all discussed below), and "f MANL/LOAD"—the chart-loading function described earlier. The **f90** function thus provides for rapid and orderly review and restoration of data, instructions and information previously entered by performing other functions. The **f90** function is to be performed when there is a possibility that the apparatus has developed "digital amnesia"—due to loss of ship's power for an interval longer than the ten-hour capacity of the backup battery.

While the **f90** function guides the operator through a review of those data that should be replaced in memory immediately to resume navigation modes, there are certain other data that the apparatus holds in memory for up to ten hours that are not reviewed by the **f90** function; they are instead to be restored while performing mode operations or by performing the related "f"-key functions. These items are (1) destination and waypoint coordinates, (2) chart data, (3) bearing-point coordinates, (4) set and drift, (5) compass damping, (6) speed damping, (7) TD offset, (8) automatic log interval, (9) present position, and (10) group repetition interval.

In the preferred embodiment certain data are immediately lost from memory upon loss of ship's power: (1) direction and speed, (2) estimated arrival time, "course to steer" and distance to next way point or destination, and (3) previous mode and function operations. It will be apparent that the selection of data for maintenance by the backup battery, and the selection of data for review by the **f90** (or equivalent) function, and the selection of data items to be discarded upon loss of power are all matters of design choice, constrained by the limited capacity of a CMOS memory that can be supplied with power for a reasonable time from a backup battery of reasonable size and cost.

Keying in "**f91** ENT" initiates the "bearings are true" function. This function prompts the operator to indicate to the apparatus the character of bearings taken visually on navigational objects such as buoys or lighthouses. If these bearings are made using the ship's magnetic compass—the same compass that is connected for automatic provision of bearings to the navigating apparatus of the present invention—it is necessary to inform the apparatus that the bearings are magnetic, and therefore subject to the variation and deviation corrections stored in the apparatus. Otherwise it is necessary to inform the apparatus that the bearings are "true" bearings, such as might be obtained with a gyrocompass. The answer to this query is of course essential to proper performance of the calculations made by the apparatus using bearing data entered manually. A gyrocompass, needless to say, is not perfect, but error in a well-adjusted gyrocompass can be kept to a fraction of a degree and is not considered significant in design and operation of the preferred embodiment of the invention.

The operator keys in "**f91** ENT"; the display indicates "BRGS TRUE?"—and the operator keys in either (1) Y and ENT to reply, "Yes" or (2) N and ENT to reply, "No, bearings are magnetic."

Keying in "**f92** ENT" initiates the "display true headings" function. This operation is performed if the opera-

tor desires the apparatus to display true headings, rather than magnetic headings directly comparable with those taken automatically at the magnetic compass. This function does not affect the corrected headings used for calculations within the apparatus. If a gyrocompass is connected to provide the apparatus with true headings, then the deviation and variation corrections available in the apparatus are presumably set to zero and it does not matter how the **f91** and **f92** queries are answered.

When the operator keys in "**f92** ENT" the display indicates "DIS TRUE HDGS?" The operator answers by touching either (1) the Y and ENT keys to reply, "Yes," or (2) the N and ENT keys to reply, "No, display magnetic headings."

Keying in "**f93** ENT" initiates the "load deviation table" function. This operation prompts the operator through a procedure for entering compass deviation values to be applied automatically to all magnetic compass inputs. Like the **f52** variation-maintenance function, this operation provides a correction to magnetic compass readings, to obtain more nearly true direction signals for calculations made within the invention apparatus and for readout at the displays. The deviation correction, however, unlike the variation correction, is independent of natural disturbances in the earth's magnetic field. The deviation correction instead compensates for magnetic influences aboard the craft itself. Metallic objects, structures (such as tanks), and electrical circuits contribute to a magnetic field pattern that is unique to the particular craft, and generally varies with heading.

The deviation is the angle by which the compass is deflected, east or west, from alignment with the earth's lines of magnetic force. Measurement of deviation for different headings—taken at fifteen-degree heading intervals—produces a table of deviation values which is to be loaded into the memory of the navigating apparatus, using the **f93** function. The apparatus then automatically applies these deviation corrections, with interpolation between the fifteen-degree measurement points, to headings and bearings taken by magnetic compass—adding easterly deviation and subtracting westerly deviation. The operator must take care that nothing is done to alter the ship's magnetic field and change the deviation values—or, when a change is necessary, the operator must take care to revise the deviation table after the change. Small metallic objects placed very near the compass, or larger metallic aggregations, electrical wiring, or electronic equipment even though placed farther away, can all change the value of deviation.

When the operator keys in "**f93** ENT," the display indicates "DEV XXXS **000**", where "**000**" identifies the first heading interval in the table—namely, the interval from −7.5 to +7.5 degrees. The indicated value "XXX" is the initially preset amount (if any) of deviation for that first heading interval, and "S" is the direction—E for east and W for west—of that initially preset deviation value. The operator uses the numeral keys **37** and the E or W key as appropriate to specify the deviation measured at the center (i.e., zero degrees) of this heading interval. The operator then touches the ENT key to enter this keyed-in value, and the display indication shifts to "DEV XXXS **015**"—requesting the deviation entry (measured at fifteen degrees) for the interval +7.5 to +22.5 degrees. This procedure, with different interval and deviation values, of course, is continued to complete the table and the **f93** function.

Keying in "**f94** ENT" initiates the "time set" function. In this operation the operator enters the present date and Greenwich mean time to set the internal clock in the apparatus. The clock is then able to provide precise time labeling for DR and fix positions, for calculation of arrival times, and for convenient display of correct local time. The internal clock, which operates on the traditional naval twenty-four-hour system, should be set after initial installation, and should be checked (and if necessary reset) after interruption of ship's power longer than ten hours. The backup battery powers the clock directly during loss of ship's power for ten hours or less.

Time is displayed as "DDHHMMX MON" where "DD" is the date of the month, "HH" is the hour of the day in local-zone standard time, "MM" is the minute of the hour, "X" is a local time-zone designator and "MON" is the name of the month, abbreviated. The time-zone designator is actually a "Z" for the fifteen-degree time zone centered on the Greenwick meridian at zero degrees, an "A" for the next fifteen-degree time zone to the east, then a "B," and so forth (the letter "J" being omitted) to the zone between 157.5 and 172.5 degrees east longitude. The seven-and-a-half-degree zone between 172.5 and 180 degrees east longitude is assigned designator "M." Similarly the designator is an "N" for the fifteen-degree time zone to the west of the Greenwich-centered zone, then an "**0**," and so forth to the zone between 157.5 and 172.5 degrees west longitude. The remaining seven-and-a-half-degree zone between 172.5 and 180 degrees west longitude is assigned designator "Y." As an example, 121423R SEP is 1423 hours (2:23 pm) standard time, in zone R (67.5 to 82.5 west longitude) on Sept. 12. The time zone R is the zone in which New York City is located; hence the time displayed is United States eastern standard time. (Simple geometrical time zones, defined in this way by the principal meridians, are used rather than the complex zone boundaries established in some areas.)

Once the clock is properly set, the displayed time when the operator touches the TIME/CTS-D key is the local time for whatever point is designated—either present time at present position, or estimated arrival time for a way point or destination. The displayed time thus is not necessarily the time that would prevail at the craft's present position, for the way point may be in a different time zone.

The operator keys in "**f94** ENT"; the display indicates "CURRENT TIME" and "YEAR YY", where "YY" is the current year. If YY is indeed the current year, the operator touches the ENT key; if not, the operator uses the numeral and ENT keys to enter the last two digits of the current year—e.g., 93 for 1993. The display then shows "CURRENT TIME" and "MONTH MM", where "MM" is the month number of the present month. The operator touches the ENT key if "MM" is correct, or uses the numeral and ENT keys to enter the correct number—e.g., 11 for November.

The display then continues to prompt the operator in similar fashion through entry of the day, hour, and minute (all in Greenwich mean time). When the operator has entered the minute, the displays indicate "ENT ON TONE" and "DDHHMMX MON". The second portion of the display gives the date and time information the operator has just entered, but now converted to local date and time, for convenience of checking against local time before the entered value is finally set on the clock. The first portion of the display, "ENT ON

TONE," reminds the operator that the time should ideally be set on the clock in coordination with a Greenwich-mean-time signal tone obtained from a standard time service such as WWV or WWVH (see DMAHTC Publication **117**A, "Radio Navigational Aids"). The operator presses the ENT key at the time tone, to complete setting of the clock.

b. Startup

Operation of the apparatus will begin under one of the following conditions.

(1) On initial installation or after a long powerless shutdown, the operator should perform function **f90**, "memory maintenance," described earlier. The final portion of this procedure will include the function obtained by keying in "f MANL/LOAD," also described earlier, which will reestablish variation and chart data for the map to be used first. Other chart data may be reestablished whenever convenient. Compass and speedometer damping are preset to strength of five, on the damping scale described in connection with functions **f50** and **f51** in part a above, and the operator may reset them too whenever convenient. The desired operational mode may then be selected using keys **45** through **47**; and the use of the apparatus can proceed as desired.

(2) On startup in a new area with a new chart, if power has not been down more than ten hours the operator need only perform the "f MANL/LOAD" function—the chart-loading function described earlier—and select the desired mode, proceeding with use of the apparatus.

(3) On startup with the chart for the local area still in place in the apparatus, again assuming that power has not been down more than ten hours, the chart and its data are both ready for service, and the operator need only key in the desired mode and proceed.

c. DR Mode

In the dead-reckoning mode, operation is largely automatic—unless heading, speed, set, and drift data must be manually entered as previously described. If not, the operator's function is simply to observe the various information presented at the screen and displays, and use it as appropriate in guiding the craft.

This description is only true, of course, between bearing fixes (using the bearing-fix mode, discussed below), so unless the craft is in the open ocean the operator will generally not be inactive, as to the navigation process, for very long intervals.

d. Bearing-Fix Mode Details

The BRG FIX key **45** is used in piloting to determine (or "fix") the craft's current position, based on "observations" of navigational aids—that is, stationary objects of known position. The known positions of these objects are called "bearing points." Usually, but not necessarily, these so-called "bearing points" appear or can be located on the chart being used. "Observations" may be made on one, two or three such "bearing points." Each "position fix" found using a bearing point requires two kinds of data: (1) the known, fixed position (e.g., latitude and longitude) of the bearing point itself—as found from the chart or other reference literature—and (2) the bearing and/or distance from the craft to the bearing point, as "observed."

The words "observed" and "observation" are placed in quotation marks because these "observations" are not necessarily visual. A bearing taken with compass, pelorus, radar or (as a last resort) radio direction finder (RDF) is usable to determine a line of position (LOP). A distance measured by radar, stadimeter or sextant is usable to determine a distance circle of position (COP). Bearings and distances observed by other means—for example, a range line of bearing, or a short distance measured on the chart from a buoy alongside to a bearing point—can be used also. In air navigation a somewhat different group of bearing points and observation systems is available—including, for example, a "distance-measuring equipment" (DME) radio receiver, in the so-called "TACAN" system.

Bearings are entered in three digits—for example, 030 or 153—including the zeroes where applicable. Distances are entered in two digits on each side of the decimal point—for example, 09.10 or 13.70—likewise including the decimal point and zeroes where applicable. The apparatus automatically records time of entry of the bearing data, for a particular bearing, as the time of that bearing; and it advances LOPs by dead reckoning to take account of ship movement between bearings. The operator's procedures will be illustrated shortly, and the calculations which the apparatus performs in response are detailed in subsection 5, "Programming." The time of the fix position (that is, the calculated present position of the craft) is the time the last bearing is entered for the fix.

After the apparatus has calculated two or more fixes in succession, the apparatus proceeds automatically to calculate the effective set and drift between the two positions, and applies these calculated values as a correction to subsequent course and speed for dead-reckoning tracking.

A general description of the fix procedure will be presented first, and then a more detailed stepwise procedure. The operator selects bearing points or objects in advance, numbering them "1," "2," "3," etc., to prepare for entry into the apparatus for later use. The apparatus advantageously accepts and stores up to nine points. The operator places the apparatus in its bearing-fix mode, and the displays **31** ask whether location data are to be entered for new bearing points, and, if so, how many points. The operator enters new bearing points, if any, with their position data—replacing those points no longer needed. A new point 2, for example, is entered by "writing over" the old point 2; the latter point is automatically erased from the apparatus memory. Bearing points, unlike way points, need not be entered in the anticipated order of use.

The operator is then asked whether bearing data are ready for entry. If it is not yet time to make the bearing observations, the operator has completed bearing-mode operation for the time being. The bearing points with their position data will remain in memory until the craft moves into the area where the bearing data are to be taken.

When the operator decides to make the bearing observations, he again places the apparatus in its bearing-fix mode, and the apparatus requests bearing data. The operator enters bearing (or distance) data in responses to questions in the displays, identifying each item of data with the previously entered bearing-point numbers (and therefore the corresponding position data). As data are entered, the apparatus will then calculate position fixes in this programmed order of preference: (1) bearings on two points—FIG. **21***c*, (2) bearings on three points—FIG. **21***d*, (3) bearing and distance to one poin-

t—FIG. 21*a*, and (4) bearing on one point plus later bearing on the same point—FIG. 21*b*.

The apparatus automatically finds the fix position (i.e., craft's calculated present position) whenever enough data are entered for any of the above four cases. The fix position is displayed in either latitude-and-longitude or GRI-and-TD format, as determined by the display key **34** or **35** last pressed. The display blinks on and off if it was necessary for the apparatus to advance an LOP by dead reckoning for more than thirty minutes for the fix; it continues to blink until a more reliable fix is obtained.

The map transport mechanism then moves to align the calculated fix position (on the map) with the crosshairs; and from this position the craft's present location continues to be advanced by tracking in whatever mode (DR track or Loran) the apparatus was in prior to entering the bearing-fix mode—or by tracking in whatever new mode is now selected. The optional recorder, if present, automatically records fix latitude and longitude, with the corresponding bearing (and distance, if any) data and the date-time group of the fix.

The foregoing procedure will now be described in terms of keystrokes and display indications. To enter the preliminary bearing-point identification and location data, the operator touches the BRG FIX key **45**, and the apparatus displays read "NEW BRG PTS?" and "ENTER Y OR N". It is assumed for the purposes of this discussion that the operator wishes to enter new bearing points with their positions; therefore the operator's appropriate response is to touch the Y (yes) key. The displays **31** will then indicate "HOW MANY PTS?" The operator touches one of the numeral keys and then the ENT key in reply, to indicate the total number of bearing points which the operator wishes to have active in the bearing-point list.

The apparatus then initiates a systematic review of all the bearing points, if any, that are already in its memory—up to the number of points just indicated. If no bearing points are in memory already, or there are some but fewer than the number of points just indicated by the operator, the apparatus will ask the operator to fill the empty memory positions as part of the "review." The review procedure is as follows.

If one or more bearing points were previously entered, the apparatus automatically operates the map transport mechanism to move the charted location of bearing-point number **1** to the crosshairs—if this bearing point is on the chart at all—and the displays **31** indicate the position coordinates for bearing-point number **1**. The operator touches the MARK key **44** if point number **1** is to be kept in the list. If, however, no bearing points were previously entered, the displays indicate "MOVE TO PT **1**," and the operator responds by operating the direction keys **43** to align the desired point-number-**1** position with the crosshairs—or, if point number **1** is off the chart, the operator keys in coordinate or GRI-and-TD data as previously described in part a—and then touches the MARK key to enter point number **1** on the list.

The apparatus then proceeds to bearing point number **2** (assuming that the operator indicated that there would be more than one point in the list), and again either presents the previously entered bearing-point location or invites the operator to "MOVE TO PT **2**," depending upon whether there are previously entered data in the point-number-**2** memory bank. This sequence is repeated for higher-numbered points, up to the total number of active points indicated by the operator, prompting the operator to review and update all of the point numbers and positions in the active list of bearing points. Higher-numbered (i.e., inactive) bearing-point memory locations, if any, are neither reviewed nor disturbed in this procedure.

When the last point in the active part of the list has been reviewed, the map transport mechanism returns the craft's present position to the crosshairs, and the displays indicate "BRGS?" and "ENTER Y OR N". Assuming that the operator has not yet reached the area in which the first actual bearing (or distance) measurements are to be made, the appropriate response is to key in N and ENT; the apparatus then automatically returns to whatever tracking mode was last in use.

When ready to make the actual observations, the operator again touches the BRG FIX key, and the displays again query "NEW BRG PTS?" and "ENTER Y OR N". Assuming now that the operator has no new points to add to the list, but only wishes to make and enter the measurements, the appropriate response this time is to touch the N and ENT keys. The apparatus responds by initiating a procedure for accepting measurement data. The displays indicate "PT NO? . . . **0**", and the operator responds by touching the numeral key for the bearing point he is observing—e.g., 4 for point number **4**—and then the ENT key. The displays indicate "BRG X **000000**" to ask for bearing data for the selected point ("X" being the selected point number), and the operator touches the numeral keys and the ENT key to enter the bearing.

The apparatus then asks the operator whether there are data for another point, by indicating at the displays "PT NO? . . . **0**". In accordance with the order of preference listed earlier in this discussion, the apparatus does not invite entry of distance (as opposed to bearing) data unless there are bearing data for only one point. If there are bearing data for more than one point, the operator now keys in the next bearing-point number for which bearing data are available, and the display again requests the data by displaying "BRG X **000000**"; the operator responds with the bearing for this point, and so forth until all bearing data have been entered. The operator then touches the ENT key. It is still assumed for purposes of this discussion that bearing data have now been entered for more than one point. The apparatus calculates a position fix (as described below with reference to FIGS. 21*c* and 21*d*), completing the bearing-fix mode of operation and returning to the tracking mode previously in use.

If, however, there are bearing data for only one point, then when the operator touches the ENT key (the second time) after entering the data for that one point the display indicates "DIST **000000**"—asking for a distance measurement on that one point, to complete the calculation (as described below with reference to FIG. 21*a*). If the distance is known the operator uses the numeral keys and the ENT key to enter the distance in nautical miles; or if the distance is not known the operator touches the ENT key again. In the latter case the display then indicates "BRG **000000**"—asking for a second bearing on the same point, to be taken later, after the craft has moved to a significantly different position, but preferably within a thirty-minute period to minimize dead-reckoning inaccuracy. When the craft has reached a suitable second position, the operator takes the second bearing on the same point and uses the numeral and ENT keys to enter the measurement. The apparatus

then completes the calculation (as described below with reference to FIG. **21***b*), and then returns to the tracking mode previously in use.

Numerical examples of the calculations for the four types of bearing fix will now be presented. FIG. **21***c* illustrates a two-bearing fix in a coastal piloting situation, with bearings to be taken on a lighthouse **343** and a channel departure buoy **341**. Assuming that the bearing-point position data have previously been entered, the key operation sequence is: BRG FIX (enter mode), N ENT (no new points), Y ENT (bearing data are available . . .), **1** ENT (. . . for point **1**), **015** ENT (the bearing to point **1** is 015 degrees).

It is also assumed here that the last touching of the ENT key occurred at precisely 0900 hours, and that the previously entered location of bearing-point number **1** was the location of the buoy **341**. Accordingly, the apparatus has now recorded the time 0900 and the fifteen-degree bearing measurement in association with the buoy **341** (and its previously entered position coordinates). The geometric implication of this is that the craft has been located somewhere along the straight "line of position" (LOP) **342**.

It will next be assumed that the operator prepares to take a sighting on the lighthouse **343**, and that nearly ten minutes elapse before this measurement is completed. The key operation sequence now is: **3** ENT (bearing data are now available for point **3**), **103** ENT (the bearing to point **3** is 103 degrees), ENT (no more bearings). It is assumed that the previously entered location of bearing-point number **3** was the location of the lighthouse **343**, and that the next-to-last touching of the ENT key occurs at 0910 hours; accordingly, the apparatus has now recorded the time 0910 and the 103-degree bearing measurement in association with the lighthouse. The geometric implication of this is that the craft has been located somewhere along the straight LOP **345**.

During the ten-minute interval required for the second measurement, however, the craft has moved. Although the apparatus was not previously able to compute the place along LOP **342** at which the craft was located, it is able to compute by dead reckoning the effective new position **346** of the earlier-determined LOP **342**. The dashed lines **347** illustrate the DR "advance" of the LOP **342** during the interval from 0900 to 0910 hours, following the craft's motion, to new virtual LOP position **346**. The geometric (or physical) significance of this is that if the craft was "somewhere along LOP **342**" at 0900 hours, it must be "somewhere along LOP **346**" at 0910 hours.

The apparatus is now able to calculate the craft's position as point **348**, at the intersection of the dead-reckoning-advanced virtual LOP **346** and the actual LOP **345**. From the direction of the dashed lines **347** it may be seen that if the apparatus did not advance the actual LOP **342** by dead reckoning, but merely treated the LOP **342** as having been taken at 0910 hours, the position at 0910 hours would be in error by distance along the projection **345'** (dashed portion) of LOP **345** to erroneous intersection point **372**.

If instead the apparatus treated both measurements as having been taken at 0900 hours the position at that time would be erroneously found as point **372**, in error by distance **373** (shown bracketed) along LOP **342**—the correct point at 0900 hours actually having been point **374**. Such an error can be very significant, as suggested by FIG. **22**, which shows the distance traveled by craft at various speeds for various time intervals Δt. FIG. **22** indicates, for example that a craft traveling at only five knots for only five minutes will travel over 700 yards—more than ample error distance to generate a catastrophe in coastal piloting.

FIG. **21***d* illustrates a three-bearing fix, which has the advantage of being independent of compass error (and in fact offering an opportunity to determine the size of compass error). It is assumed that a first buoy **351** is point **1**, a lighthouse **354** is point **2**, and a second buoy **357** is point **3**—all with position data already entered. After measurement of the bearing to the first buoy, the operator's key operation is BRG FIX (enter mode), N ENT (no new points), Y ENT (data are available now . . .), **1** ENT (. . . for point **1**), **005** ENT (the bearing to point **1** is five degrees). If the ENT key was last touched at exactly 1600 hours, the apparatus can now determine that the craft is somewhere along LOP **352**, which passes through buoy **351**. The operator next takes a bearing fix on the lighthouse **354**, entering: **2** ENT (point **2** is next), **050** ENT (the bearing to point **2** is fifty degrees).

If it is assumed that the ENT key was last touched at 1615 hours, the apparatus could now determine a position fix at the intersection of dashed line **353** (the DR-advanced position of LOP **352**) with LOP **355** through the lighthouse **354**. To keep the calculation open for the third bearing, however, the operator now refrains from touching the ENT key again (which would indicate that there were no further bearing data). Instead the operator takes a sighting on the second buoy **357**, and keys: **3** ENT (point **3** is next), **094** ENT (the bearing to point **3** is ninety-four degrees), ENT (there are no more bearing data).

If it is assumed that the ENT key was next-to-last touched at 1625 hours, the apparatus calculates a position fix at the most reliable value for the intersection **362** of three lines of position: (1) LOP **358**, through the second buoy **357**, (2) dashed line **359**, which represents the LOP **352** through the first buoy **351**, but advanced by dead reckoning along the line of motion **361** during the interval from 1600 to 1625 hours, and (3) the dashed line **356**, which represents the LOP **355** through the lighthouse **354**, but advanced by dead reckoning along the line of motion **356**, during the interval from 1615 to 1625 hours.

If the sightings were geometrically perfect, the speed and heading sensors likewise, and the effects of set and drift negligible (or perfectly compensated), then in simplest theory the three lines **358**, **359** and **356** would all pass through a single point **362**. None of these theoretical assumptions is correct, of course, so the apparatus must resolve the apparent inconsistency (or "redundancy," or "overdetermination") in the data by calculations that attach various reliabilities to the LOPs **358**, **359** and **356**, based on the various angles between them. If desired, the assigned reliabilities could also be based on the lengths of the respective intervals during which the actual LOPs **352** and **355** were advanced by dead reckoning to obtain the virtual LOPs **359** and **356**.

FIG. **21***a* illustrates a single-bearing-plus-distance fix, near coastline **371**. It is assumed that visibility is poor, radar bearings and distances are available, six bearing points are entered in the apparatus memory—including a point **2** that will not be needed—and the radar target, a lightship **331**, is a new bearing point not previously entered. The operator keys: BRG FIX (enter mode), Y ENT (I have a new point), **6** ENT (there are six on the list), MARK (point **1** is unchanged), N S E W MARK

(replace previous point **2** with the lightship), MARK (point **3** is unchanged), MARK (point **4** is unchanged), MARK (point **5** is unchanged), MARK (point **6** is unchanged), Y ENT (I have a bearing . . .), **2** ENT (. . . on [new]point **2**), **250** ENT (the bearing is 250 degrees).

The apparatus is now able only to place the craft somewhere along LOP **332**, and if the ENT key was pressed at 1234 hours the apparatus is able to associate this line of position **332** with that time. The displays again query "PT NO? . . . **0**". The final entries must now be made promptly, since the preferred embodiment of the invention does not advance LOPs in this type (single-point, bearing and distance) of fix. The operator answers by keying in ENT (no other points have bearing data). The displays indicate "DIST **000000**"—asking for a distance fix. The operator keys in **12** ENT (distance is twelve nautical miles). The apparatus now calculates the craft's present position as the intersection **334** of LOP **332** with "circle of position" (COP) **333**. Since both bearing and distance are read from the same apparatus it is easy to hold the interval between entries of the two data items to a minute or less; alternatively, if feasible, the craft can be halted, to eliminate any motion error as between the two pieces of data.

FIG. **21***b* illustrates a two-bearing fix on a single object—the so-called "running fix". It is assumed that the lighthouse **335** is bearing-point number **5** and that position data are already entered. The operator keys: BRG FIX (enter mode), N ENT (I have no new point), Y ENT (I now have bearing data . . .), **5** ENT (. . . for point **5**), **060** ENT (the bearing is sixty degrees). The apparatus now can place the craft somewhere along LOP **336**, at the time the ENT key was last touched—here assumed to be 1410 hours. As in the previous example the displays query "PT NO? . . . **0**" and the operator answers by keying ENT (no more points).

The displays indicate "DIST **000000**"—asking for a distance fix as in the previous example—but now the operator answers by again keying ENT (no distance data). The displays then indicate "BEARING **000000**," and the operator delays responding until the bearing on the lighthouse **354** has changed significantly—because small angles between bearings can produce a relatively uncertain position, relatively sensitive to errors in bearing measurement.

The operator must also, however, guard against accumulating too large a potential dead-reckoning error, which would arise from too large an interval between bearing measurements. As suggested in FIG. **21***b*, a ten-minute delay and thirty-five-degree angle between the LOPs represent a satisfactory compromise between the two potential error sources.

Thus, at 1420 hours the operator keys: **025** ENT. The apparatus now calculates present position at the intersection **340** of the new LOP **337** with dashed line **338**, which represents earlier LOP **336** advanced by dead reckoning (along motion lines **339**) during the interval from 1410 to 1420 hours. It will now be clear that, while the advancement of earlier LOP by dead reckoning is "merely" very important to accuracy in plural-bearing-point fixes (as discussed above with reference to FIG. **21***c*, and as can be understood with reference to FIG. **21***d*), such advancement by DR is absolutely essential to possibility of single-bearing-point, two-bearing fixes (FIG. **21***b*). The entire "running fix" calculation would be geometrically meaningless if the craft's motion were disregarded.

e. Loran Mode

It is assumed here that the apparatus has a suitably attached Loran receiver, and includes a suitably configured Loran Interface Module (FIG. **14**, and **274** in FIG. **10**). Once the operator has keyed in the Loran "group repetition interval" (GRI) for the craft's present operating area, the apparatus then continually receives Loran data for that GRI from the Loran receiver.

The apparatus evaluates Loran time differences (TDs) as they are received, assessing the distance to the corresponding Loran transmitters, the crossing angle between constant-TD lines (the conceptual equivalent of dead-reckoning LOPs and COPs), and the "station-pair baseline extension." (The latter may be thought of as the geometrical projection of a straight line between two of the Loran transmitters that produce a single TD.) The apparatus automatically selects the two best TDs, based on these criteria, and then computes a position fix. If the two best TDs provide only marginal positioning accuracy, the displays **31** blink on and off while indicating the computed fix position. The apparatus calculates a Loran fix once per minute; and performs the complete evaluation, selection and computation cycle every five minutes.

The apparatus uses the Loran fix position in two ways: (1) to reposition the DR track that it is maintaining, and (2) to compare with the DR track accumulated during the preceding minute, to compute the set and drift as explained in part a above. Course and speed are then automatically corrected for this up-to-date set and drift, and the corrected course and speed are used to improve all DR tracking calculations for the succeeding minute. The Loran fix position and the thus-updated set and drift are also used to display (or provide to an autopilot) a set-and-drift compensated "course to steer," as previously explained. Since this "course to steer" is updated each minute, both as to desired track and as to set and drift, the actual course made good over the bottom will be almost exactly a beeline for the next way station. This operation will be illustrated shortly.

(For best accuracy over very long distances, the apparatus should be programmed to project "course to steer" along "great circle" routes. Equations for this purpose are available in the literature; however, this type of calculation is not required for practice of the present invention under more typical circumstances and will not be discussed further here.)

To initiate the Loran mode, the operator verifies that the Loran receiver is properly connected, set to the GRI for the intended operating area, and tracking; and then touches the Loran key **47** (FIG. **2**). The operator next touches the GRI/TD key **35**, to verify that the GRI stored in the apparatus is the correct one for the operating area. If the displayed value is not the correct one, the operator keys in "f GRI/TD" and then enters the desired GRI using four digits and the ENT key. The operator watches the displayed TDs for a while to ensure that the Loran receiver is settled in its operation, and then enters present position by performing function **f0**, "enter present position," described in part a above—thus giving the DR calculations a suitable starting point.

If the apparatus is receiving only one TD, or none, no Loran operation is possible, and the displays **31** indicate "RECEIVER ON?" If two TDs are received, and they are in combination satisfactory for a fix, the apparatus determines and displays latitude and longitude each

minute and uses the results as previously described; if the two TDs only permit a fix of marginal accuracy, operation is the same except that the displayed coordinates are shown blinking on and off. If three, four or five TDs are received, the apparatus selects the two best TD values for accurate results and then proceeds in the same way as when only two values are received.

f. Piloting Effectiveness; Fuel and Time Efficiency

The apparatus of the invention is useful in helping to guide—or in guiding—a craft to its way points and destination, not only with greater certainty but also more directly. As previously suggested, the preferred embodiment aids the operator in refining whatever knowledge is available about heading, speed, set, drift, and "course to steer."

If only manually observed or estimated values are available for these parameters, the apparatus helps the operator to make the most of them, by relating the estimates to bearing fixes and thereby progressively improving the estimates. If automatic heading and speed sensors are available, the resulting inherent improvements in certainty and convenience are positively enhanced by the apparatus of the present invention, which uses the automatically obtained information, in conjunction with bearing fixes, to derive quite good values for set and drift—and then to apply these values to obtain both heading-and-speed data and a "course to steer" that are set-and-drift compensated to a much better approximation than would be possible with either the automatic sensors alone or the apparatus of the invention alone.

When Loran capacity is added to this combination, an additional quantum step in piloting efficacy is obtained. Since accurate Loran fixes can be obtained automatically, and therefore quite frequently, the set-and-drift compensation for both the heading-and-speed calculation and the "course to steer" can be updated on virtually an instantaneous basis. The Loran fixes are also available to update the desired track on the same virtually instantaneous basis. The overall result is a "course to steer" that is set-and-drift compensated to a much better approximation than possible with either (1) the Loran system alone or (2) the combination, considered alone, of the apparatus of the present invention with the automatic speed and heading sensors. As will be shown in the following paragraphs, the sophistication and power of this overall system permit extremely beneficial economies of fuel and time.

FIG. **23** illustrates some of the levels in the spectrum of capabilities just outlined. It is supposed that a craft sets out from departure point **391** intending to travel as directly as possible to destination point **392**. The current **399** near the departure point is known to be generally northerly, but neither the exact set nor the exact drift is known—and in fact the actual values vary over the intended course, with a more westerly deflection arising nearer the destination point as shown at current vector **400**. The navigator determines from charts that the bearing of destination point **392** from the point of departure is 102 degrees; this is the direction for the desired track **393**.

It is assumed first that the apparatus of the present invention is not available. The navigator calls for an initial heading or "course to steer" of 120 degrees, in hopes of compensating for the known northerly current **399**. This estimate of the necessary compensation, however, is in fact inadequate, and the craft is carried northerly from the intended track, along the actual course over ground (COG) **394**. (In the drawing the north-south directions are slightly exaggerated relative to the east-west directions, for purposes of explanation.) The navigator nevertheless maintains the initial heading of 120 degrees, as indicated by the heading symbol at **395**, until visual sightings and manual computations and plotting provide an alert to the erroneous course. This modus operandi is rather primitive, even using good modern charts and hand computing aids, by comparison with the other capabilities discussed here.

Using these manual methods, the navigator may find, when first able to take a bearing fix at point **396**, that the craft has been swept far north of the intended track. A new heading or "course to steer" of 170 degrees, as at point **395**, may be adopted in an effort to direct the craft once again toward the destination point **392**. The navigator is unable to tell whether this corrective maneuver is of the appropriate magnitude until another bearing fix at point **397** becomes available. As it appears from the course over ground, the heading has this time been more auspiciously selected, and the craft appears to be traveling in the right direction, but the obvious wanderings along the way can be extremely expensive in terms of fuel, crew and equipment time, and consequently money. The energy waste alone, under modern conditions of international energy constraints, is highly significant.

Due to the availability of only two bearing points along the way, even with automatic speed and heading sensors the navigator would be hard put to make good use of the two bearing fixes in any other way than to realize that the craft is generally off course. The course made good (CMG) **410** between the two fix points is determinable to no greater accuracy than the 115-degree directed straight line joining the two points **396** and **397**, obviously very different from the actual COG **394** between the two points.

Now let it be assumed instead that the navigator has automatic sensors and the preferred embodiment of the invention, but without Loran, and let it be still assumed that the initial heading, as at **395**, is 120 degrees. Let the north-south scale exaggeration of FIG. **23** be taken now as considerably greater than for the previous discussion of operation without the apparatus of the invention, so that the same drawing can be used for this case too. Bearing fixes taken (but not illustrated) easily and quickly on shore points near the point of departure **391** will soon permit the navigator to determine quite accurately the set and drift of current **399**. Using these data the navigator can systematically reset the heading or "course to steer" near point **407** to take up a more easterly COG. A significant saving of time, fuel, and money has already been achieved. At point **409**, however, the craft begins to come under the influence of the more-westerly current **400**, and the COG again swings northward. The navigator is unaware of this until a "running fix" (FIG. **21***b*) at point **396** makes it clear that the dead reckoning has been slightly inaccurate. Assuming that there is no other bearing point in the vicinity of point **396**, it can further be supposed that the navigator takes another running fix on the same bearing point after a few minutes, obtaining an updated value for the set and drift near point **396**.

As the craft travels eastward, however, the influence of the strong northwestward current **400** increases, and the craft continues to move northerly of the desired track. If the navigator suspects this, he may attempt to

compensate—but without knowing exactly how much—by taking a new heading at point **395**. Not until the fix at point **397** is taken can the navigator get an idea of the CMG **410** between points **396** and **397**. As noted above, this CMG is a rough approximation for the actual COG **394** between the same points—but this is the very best that can be hoped for, where current set is varying strongly with position and there are few bearing points available. Under such conditions, even the apparatus of the present invention cannot produce highly accurate DR tracking without reasonably frequent data inputs. As already indicated, however, the improvement relative to manual methods or even prior instrumentation is substantial. At point **397** the navigator can again confidently (rather than by auspicious selection as before) set "course to steer" for the destination point **392**.

It will next be assumed that the craft also has a Loran receiver and interface, and for purposes of discussion it will be assumed that those units are activated during the journey just to the left of point **409**, and that Loran fixes are taken at each of the marked points **398**. Limiting the discussion first to the matter of merely determining position, the Loran fixes taken at points **398** permit the operator to see the position of the craft, and visualize the COG, precisely as it appears at curving line **394**. The Loran fixes are sufficiently frequent that any differences between COG and CMG between fix points are completely insignificant.

These discussion assumptions, however, are very unrealistic, for the navigator would not want to limit use of the system to providing an accurately scaled down view of the meandering COG shown at **394**. Rather the navigator would be intent upon using the system to set a "course to steer" that would carry the craft as directly as possible to the destination point **392**. In the diagram it is supposed that the navigator initiates this alternate mode of operation at point **401**. The result would be a nearly perfect straight COG **402**, guided by Loran fixes **403** at regular intervals along the way.

Area **408**, along the straight course **402**, is shown greatly expanded within the enclosed area **408'**, to illustrate more specifically the iterative compensations of course provided by the system. In the expanded drawing, line **402** represents the ideal straight course, and line segments **405**, **405***a*, etc. through **405***d* represent the actual COG. Points **403***a*, etc. are Loran fix points, and points **406***b*, etc. are positions predicted by dead reckoning. The line segments **404***a*, etc. represent the track predicted by DR. It will be assumed that the craft position at **403***a* happens to be exactly on the desired track **402**, and the "course to steer" extends directly along the desired track. When the next Loran fix is taken at point **403***b*, however, it will be discovered that—although the DR track **404***a* has brought the DR-calculated position of the craft to point **406***b*, precisely along the desired track **402** as predicted by the "course to steer" setting called for—the Loran fix produces a position **403***b* that is very slightly south of the DR position **406***b*.

This slight discrepancy, due principally to local variation in the ocean currents, causes the apparatus automatically to decrease very slightly its calculated value of northerly drift. This adjustment, plus the very slight change in bearing of the destination point, results in redirecting the "course to steer" slightly, aiming for the path **404***b*. It is assumed that along this leg of the travel the set and drift values are extremely close to the calculated values as just adjusted, so the COG line segment **405***b* lies almost perfectly along the desired track **404***b*. Accordingly, when the next Loran fix is taken at point **403***c*, and compared with the DR-predicted position **406***c*, it is found that the two points are virtually identical. This implies that the DR-track line segment **404***b* is practically congruent with the COG line segment **405***b*.

This being the case, no change is made in the "course to steer"—which is set to produce travel along line segment **404***c*. The DR calculations, therefore, predict travel along line segment **404***c* to point **406***d* at the time of the next Loran fix. Another local variation in set and drift, however, swings the course northerly along COG line segment **405***c* to Loran fix point **403***d*. Comparison of points **403***d* and **406***d* automatically by the apparatus once again revises the calculated set and drift values, and the "course to steer" is therefore reoriented to move the craft along line **405***d*. Even with the very extreme exaggeration of north-south excursions relative to east-west travel in the expanded area **408'** of FIG. **23**, the COG segments **405***a*, **405***b*, **405***c* and **405***d* are all rather closely parallel to the desired straight track **402**; and the actual Loran-fix positions **403***a*, **403***b*, **403***c* and **403***d* are all extremely close to the desired track **402**. The lateral excursions are in fact negligible, resulting in very significant fuel, time and money economies.

5. PROGRAMMING

To enable a person skilled in the art to practice the present invention, in its preferred embodiment that has been described, some person skilled in the art of computer programming must program the three microprocessors to control all the hardware in such a way that all the many described tasks are performed correctly and conveniently. The skilled programming artisan can accomplish this task by reference to the program-structure diagrams that are presented as FIGS. **31** et seq. of the accompanying drawings, along with the other information given in this text.

FIG. **24** illustrates the allocation of memory-location numbers in the central processor unit of the preferred embodiment. The address numbers are given in hexadecimal notation, in which there are sixteen digits as follows: 0123456789ABCDEF. The digit "A" represents decimal 10, and the digit "F" represents decimal 15. Thus the notation "F **8000**" represents decimal $15\times16^4+8\times16^3$, and the notation "FFFFF" represents 16^5-1. With this notation established, FIG. **24** is largely self-explanatory. The gaps (as for example between **0A000** and **0E000**) are simply unused address intervals. The terminology used in the drawing is either explained in the discussion of the electronic system, subsection 3 above, or is conventional in the programming arts.

Several navigating equations must be solved by the microprocessors, and special geometric problems must be solved for Loran operation. To practice the invention it will not be necessary to derive—or even completely understand—the necessary equations, for those equations are presented here, and their solution is a matter of simple algebra programming, well within the programmer's skill.

The dead-reckoning and "course to steer" and set-and-drift equations are all essentially simple arithmetic and trigonometry, derived simply from the elementary vector relations appearing in FIG. **20**. The derivations take into account the fact that the distance (expressed in terms of arc about the center of the earth) corresponding to any longitude increment traversed by a craft is

equal to the size of that longitude increment divided by the cosine of the latitude at which the excursion occurs, $\Delta x = \Delta\lambda/(\cos L)$.

In the foregoing expression and throughout the following text the customary notation λ is used for longitude and L for latitude. It is convenient to manipulate these quantities in degrees—since that is the form in which they will be input and output—except where either appears as the "argument" of a trigonometric function (as does L in the expression above). In the latter case it is preferable to convert to radians, to accommodate the trig-function protocol in most suitable microprocessors. (The symbol x used above generally indicates distance, and the symbol Δ is used as is customary to indicate a small increment in the following parameter.)

Over relatively short distances on the earth's surface the dead-reckoning latitude L may be taken as the starting latitude L_1, or preferably as the average of the starting and ending latitudes $(L_1+L_2)/2$. Thus, to find latitude L_2 and longitude λ_2 of present position from latitude L_1 and longitude λ_1 at an earlier position, with known speed S and drift d in nautical miles per hour, known heading H and set s in radians clockwise from north, and known starting and present times T_1 and T_2 in hours and decimal fractions of hours (with appropriate correction when T_2 is in a later day than T_1):

$$L_2 = L_1 + (S \sin H + d \sin s)(T_2 - T_1)$$

$$\lambda_2 = \lambda_1 + (S \cos H + d \cos s)(T_2 - T_1)\cos\frac{L_1 + L_2}{2}$$

To find set and drift from present and earlier coordinates and known heading and speed, the same equations are solved for the desired values:

$$s = \tan^{-1}\frac{\dfrac{L_2 - L_1}{T_2 - T_1} - S \sin H}{\dfrac{\lambda_2 - \lambda_1}{(T_2 - T_1)\cos\dfrac{L_2 + L_1}{2}} - S \cos H}$$

$$d = \frac{\dfrac{L_2 - L_1}{T_2 - T_1} - S \sin H}{\sin s}$$

The equations necessary for bearing fixes are as follows. FIG. **25***c* illustrates the terms that must be defined for a two-bearing fix (see also FIG. **21***c* and the corresponding discussion). The point PP is the craft's present position, at longitude λ_p and latitude L_p to be determined. The points BP_1 and BP_2 are the effective bearing points of known longitude λ_{b1} and λ_{b2} and latitude L_{b1} and L_{b2} respectively. The term "effective" is used here because the point BP_1 is not the actual tabulated or charted location of the bearing point—e.g., the buoy **341** in FIG. **21***c*—but rather the virtual position obtained by applying the dead-reckoning track **347** (FIG. **21***c*) to the actual coordinates of the bearing point. In effect the bearing point is "moved over" along with the craft, by dead reckoning. This provides the effect of shifting the entire LOP **342** (FIG. **21***c*), as described in subsection 4d above, to the new position **346** (FIGS. **21***c* and **25***c*).

The angles B_1 and B_2 are the bearings, entered in degrees but preliminarily converted within the computer to radian measure to accommodate the format used for trigonometric "arguments" in the microprocessor. (As previously noted, latitude values where involved as cosine "arguments" should be converted too, but not latitude values otherwise.) If neither B_1 nor B_2 is either zero or 180 degrees, the desired present-position longitude λ_p and latitude L_p are found in degrees as follows, x_p and y_p being useful intermediate variables.

$$x_p = \frac{(\lambda_{b2} - \lambda_{b1})\cos\dfrac{L_{b1} + L_{b2}}{2} - (L_{b2} - L_{b1})\tan(\pi/2 - B_2)}{\tan(\pi/2 - B_1) - \tan(\pi/2 - B_2)} \quad (1)$$

$$y_p = x_p \tan(\pi/2 - B_1) \quad (2)$$

$$L_p = L_1 + y_p \quad (3)$$

$$\lambda_p = \lambda_1 + x_p/\cos\frac{L_p + L_1}{2} \quad (4)$$

If, however, the angle B_1 is zero or 180 degrees (π radians) then the singularities (infinitely high values of the tangents, preventing completion of the computation) in the foregoing equations require use of a different solution:

$$x_p = 0; \quad (5)$$

$$y_p = L_{b2} - L_{b1} - (\lambda_{b2} - \lambda_{b1})\cos\frac{L_{b1} + L_{b2}}{2}\tan(\pi/2 - B_2) \quad (6)$$

These values are inserted into equations 3 and 4 above. If the other bearing angle B_2 is zero or 180 degrees, then equations 5 and 6 with subscripts 1 and 2 exchanged provide the correct intermediate results for insertion into equations 3 and 4.

For a running fix (FIGS. **25***b* and **21***b*), the equations are exactly the same except that the coordinates of the single bearing point are translated by the amount of the dead-reckoning track between the two bearing times, to give a virtual or effective position of the bearing point for association with the first bearing taken. This statement may be better understood from the following details. With reference to FIG. **26***b*, it will be recalled that the single bearing point BP is sighted from an earlier position EP and from a later position PP. The position EP is not known and will not be determined. The position PP has coordinates λ_p, L_p to be determined. The dead-reckoning track **339** is applied to the bearing point BP, to locate the virtual bearing point BP'.

Now assigning the coordinate notation λ_{b1}, L_{b1} to the known longitude and latitude of the actual bearing point BP, and the coordinate notation λ_{b2}, L_{b2} to the known longitude and latitude of the virtual bearing point BP', the coordinates of the present position PP are found from equations 1 through 6 above.

For a three-bearing fix (FIGS. **25***d* and **21***d*), the program must shift the first two bearing points by dead reckoning as for the two-bearing case. The next step is to compute the intermediate x_p and y_p for each pair of bearings—that is, for all three of the possible combinations that can be formed by taking the bearings two at a time. Equations 1 and 2, and/or 5 and 6 if any of the bearings is zero or 180 degrees, are used to find these intermediate variables. More specifically, the intermediate variables x_{p1} and y_{p1} are formed for the combination of bearings B_1 and B_2; the variables x_{p2} and y_{p2} are formed for the combination of bearings B_1 and B_3; and the variables x_{p3} and y_{p3} are formed for the combination of bearings B_2 and B_3. Treating these sets of variables and corresponding bearings generally as x_{pn}, y_{pn} for

bearings B_i, B_j, and B_k, with the i, j, and k subscripts to be defined below, another set of intermediate variables x_p' and y_p' must next be calculated according to:

$$x_p' = \frac{y_{pi} + x_{pi}\cot\frac{\pi - B_i - B_j}{2} - y_{pj} - x_{pj}\cot\frac{\pi - B_i - B_k}{2}}{\cot\frac{\pi - B_i - B_k}{2} - \cot\frac{\pi - B_i - B_j}{2}} \quad (8)$$

$$y_p' = y_{pi} + (x_{pi} - x_p')\cot\frac{\pi - B_1 - B_j}{2} \quad (9)$$

in which the subscripts i, j, and k must be assigned as follows. First it is necessary to identify which bearing value among the three is the largest, and which is the smallest, and which is between the other two. These will be referred to as the maximum, minimum and middle bearings, respectively; and the difference between the maximum and minimum bearings will be called the bearing spread. If the bearing spread is equal to or greater than 180 degrees, then the subscripts should be assigned thus:

$$i=1,\ j=2,\ k=3. \quad (10)$$

If the bearing spread is less than 180 degrees, then the middle bearing controls the assignment of subscripts, as follows:

$$\text{middle bearing is } B_1\text{—}i=1,\ j=2,\ k=3; \quad (11)$$

$$\text{middle bearing is } B_2\text{—}i=2,\ j=1,\ k=3; \quad (12)$$

$$\text{middle bearing is } B_3\text{—}i=3,\ j=1,\ k=2. \quad (13)$$

Once the variables x_p' and y_p' have been found from equations 8 and 9, they are used in place of x_p and y_p respectively in equations 3 and 4 above to establish the fix coordinates L_p and λ_p that are sought.

Equations 8 and 9 are subject to singularities (infinitely high intermediate results, preventing completion of the computation) if either B_i+B_j or B_i+B_k is very close to zero or 180 degrees. The easiest way to deal with this problem is to program the computer to "inspect" these sums of bearings before beginning equations 8 and 9, and if either sum is very close to zero or 180 degrees, then to present that sum to an arbitrary small value (but not too small)—for example, 0.001 degree, or 0.00001 radian—to permit the apparatus to complete the calculation. The exact small value arbitrarily chosen will cancel out of the results, as long as it is used consistently and is not so small that the singularity effectively arises anyway.

For a bearing-and-distance fix (FIGS. **21***a* and **25***a*) the input data are the known latitude and longitude L_b and λ_b of the single bearing point BP, and the measured bearing B and distance D to the bearing point BP. The bearing B is initially entered in degrees and the distance D in nautical miles. The bearing B should be converted to radian measure; and likewise the latitude L_b where it is to be used as a cosine argument, but not otherwise. The distance D should be converted from nautical miles to degrees by multiplying the entered value by sixty. No dead-reckoning adjustment of either the bearing or the distance should be made. The desired coordinates are to be calculated from:

$$L_p = L_b - D\cos B \quad (14)$$

$$\lambda_p = \lambda_b - D\sin B \div \cos L_b \quad (15)$$

Once the apparatus has calculated earth-surface position coordinates, such as longitude λ and latitude L, it will in most circumstances have to proceed with calculation of corresponding map-transport-mechanism position coordinates X and Y. In doing so the programmed apparatus must take into account (1) the orientation (particularly including rotation) of the film-transparency map relative to the optical system, (2) the basic scale of the map, and (3) the Mercator projection function.

FIG. **26** illustrates the Mercator relations. Since all meridians are vertical, the horizontal position as measured at the map itself (i.e., ignoring for a moment the rotation of the film map relative to the transport mechanism) is simply

$$x = x_o + k\lambda, \quad (16)$$

where k is the map scale (distance on the chart per nautical mile, in any direction) at the equator, and where x_o is the offset required to account for the fact that the zero-longitude meridian is not aligned at the zero point of the transport-mechanism motion. Off the equator, the vertical position at the map (still disregarding rotation) is given by

$$y = y_o + k\ln\tan\left(\frac{\pi}{4} + \frac{L}{2}\right), \quad (17)$$

where k is the same constant and y_o is a similar offset value.

Now if the film map is rotated by an angle A relative to the optical system and the transport-mechanism tracks, the entire coordinate system must of course be transformed using

$$X = x\cos A - y\sin A + X_o \quad (18)$$

$$Y = y\cos A + x\sin A + Y_o, \quad (19)$$

to obtain the actual transport-mechanism coordinates X and Y.

The constants in these several equations are all to be automatically calculated using the chart data entered by the operator for each map, and using the rotational-orientation information which the operator provides—when loading a chart—by slewing the mechanism down the entire left edge of the chart image and then stepping across the short distance to the lower left-hand corner (see the operating procedure presented in subsection **4***a*, above). The same equations are simply solved for the constants, making use of known information—such as, for the rotational calibration, the fact that the edge of the map represents x=constant. For example, the last two equations yield

$$A = \sin^{-1}\frac{X_1 - X_2}{y_1 - y_2} \simeq \sin^{-1}\frac{X_1 - X_2}{Y_1 - Y_2} \quad (20)$$

in which X_1, Y_1 and X_2, Y_2 are the transport-mechanism positions at the top-left and bottom-left corners, respectively. The apparatus is programmed to insert the known coordinates and other information into the equa-

tions in that form, and to calculate and store the constants.

The desired transport-mechanism positions X and Y are best expressed in terms of stepper-motor steps, since the apparatus must at some point keep track of the number of such steps anyway. In calculating the desired step number that corresponds to a given longitude and latitude, in addition to the equations presented above it is of course necessary to take into account the number of steps of the map transport mechanism that correspond to a given displacement of the film-transparency map. The preferred embodiment uses bipolar four-phase stepper motors that take forty-eight steps per revolution, and uses lead screws that are pitched at forty threads per inch. The slave processor that controls the stepper motors must therefore provide 1,920 steps to move the transport mechanism one inch. Thus the mechanism steps approximately 7,300 times to cross the width of the film-mount sight, and approximately 8,650 times to traverse its length.

FIG. 27 (after Sheldon Razin, "Explicit [Noniterative] Loran Solution," *Navigation: Journal of the Institute of Navigation* volume 14, number 3, fall, 1967, p. 265 [adapted]) defines the terms necessary to perform the transformation from Loran time differences to latitude and longitude. (The reverse transformation, a much more straightforward calculation since the time-difference lines are hyperbolae, can be found in the literature and is not presented here.) The drawing represents a Loran complex on the surface of a sphere—that is, the known locations of a "master" Loran transmitter M and two associated "slave" transmitters X and Y, and the point PP (sometimes hereinafter "P") for which Loran time differences are known and latitude and longitude L_p and λ_p are sought. The latter position may represent a craft's present position or some way point or destination, depending upon the operation in progress. The values θ_{mx}, θ_{yp}, etc. respectively represent the distances between the points M and X, between the points Y and P, etc., all expressed as angles subtending arcs on the earth's surface, in radian measure.

These distances are straightforwardly calculated from the known coordinates of the three transmitter positions M, X and Y, in combination with the coordinates for the best available estimate of craft present position P. (If this initial position is taken incorrectly, the resulting error will be quickly eliminated through the iterations, one each minute, of this Loran fix procedure.) The angles B_x, B_y, and B_k are respectively the angles formed by X, M and P; by Y, M and P; and by X, M and Y; these angles too are straightforwardly found from the known coordinates of the transmitters.

The calculation begins by finding the phase-delay observed at P for station X relative to station M, and the phase delay observed at P for station Y relative to station M, which are respectively:

$$\psi_x=\theta_{xp}-\theta_{mp} \tag{21}$$

$$\psi_y=\theta_{yp}-\theta_{mp} \tag{22}$$

Next, intermediate variables are found as follows:

$$a_x=\frac{\cos\phi_x-\cos\theta_{mx}}{\sin\theta_{mx}} \tag{23}$$

$$a_y=\frac{\cos\phi_y-\cos\theta_{my}}{\sin\theta_{my}} \tag{24}$$

-continued

$$b_x=\sin\phi_x\div\sin\theta_{mx} \tag{25}$$

$$b_y=\sin\phi_y\div\sin\theta_{my}, \tag{26}$$

and from these the further intermediates:

$$U_1=a_x\cos\beta_k-a_y \tag{27}$$

$$U_2=a_x\sin\beta_k \tag{28}$$

$$U_3=a_yb_x-a_xb_y. \tag{29}$$

These quantities can be related to the angle β_x:

$$\cos\beta_x=\frac{U_3U_1\pm\sqrt{U_1^2+U_2^2-U_3^2}}{U_1^2+U_2^2} \tag{30}$$

—in which expression the plus-or-minus sign differentiates between the two roots. The calculations continue:

$$\theta_{mp}=\tan^{-1}\frac{a_y}{b_x+\cos\beta_x}, \tag{31}$$

$$\theta_{xp}=\theta_{mp}+\phi_x, \text{ and} \tag{32}$$

$$\theta_{yp}=\theta_{mp}+\phi_y, \tag{33}$$

yielding the rectangular coordinates f, g, and h of the craft, in a three-dimensional cartesian coordinate system based at the earth's center-

$$f=C_1\cos\theta_{xp}+C_2\cos\theta_{mp}+C_3\cos\theta_{yp}=\cos L_p\cos\lambda_p \tag{34}$$

$$g=C_4\cos\theta_{xp}+C_5\cos\theta_{mp}+C_6\cos\theta_{yp}=\cos L_p\sin\lambda_p \tag{35}$$

$$h=C_5\cos\theta_{xp}+C_8\cos\theta_{mp}+C_9\cos\theta_{yp}=\sin L_p, \tag{36}$$

which are then used to obtain the latitude and longitude, by solving in the form

$$\lambda_p=\tan^{-1}(g/f)$$

$$L_p=\sin^{-1}h.$$

The constants C_1 through C_9, derived from the three space coordinates of each of the three Loran stations M, X, and Y, are tabulated in the literature and available from government sources. Alternatively, they can be calculated by the microprocessor from the position coordinates—e.g., latitude and longitude—of the stations M, X, and Y as explained in the literature.

FIG. 28 defines the terms required to calculate a measure of the probable error in a Loran fix that may be anticipated for the craft's present position if a particular time difference (TD) is selected for use—that is, if a particular group (triad) of Loran transmitters is selected for use in making the fix. More specifically, the calculation aims to determine the adverse geometrical effect on accuracy that may result from selecting a particular TD.

The measure of error that is employed has been termed the "geometric dilution of precision" (GDOP). This measure isolates geometric effects, finding only the probable position error per unit probable error in TD. Thus the calculation does not purport to take into account any of the unknowable errors in phase factors or the like, which are by necessity simply assumed to be roughly the same for all the TDs available.

The GDOP is to be calculated by the apparatus automatically every five minutes, for each TD that is available. By comparing the GDOP values, the apparatus can select the TDs with minimum GDOP and therefore maximum available precision and accuracy. The equation for each GDOP is:

$$GDOP = \csc A_1 \csc A_2 \csc A_3. \quad (39)$$

The apparatus should be programmed to select and use the two TDs associated with the two minimum GDOP values.

Following is a glossary of variables that are important to control of the apparatus. The terminology introduced here corresponds to that used in the Chapin diagrams, FIGS. **29** et seq., which specify the program structure.

"PF"—The "power fail" flag is used during initialization. A checksum test is done on memory to determine whether the battery backing up the CMOS power-down memory (RAM) has dropped in voltage. If that power-fail condition is found to have occurred, this flag is set.

"OPR MODE"—The "operating mode" flag is used during operation to determine which of two modes the machine is in, DR (dead reckoning) or Loran. (The bearing-fix mode, described conceptually earlier for purposes of discussion as a mode, is treated for programming purposes as a function rather than a mode.) OPR MODE is altered by the keyboard-interrupt subroutine whenever the user touches either the DR or LORAN key.

"OPR FUNC"—The "operating function" flag indicates a request by the user to execute one of the functions. The request is indicated by touching one of the function keys, BRG FIX, LOAD/MANL, DEST/PP, or the "f" key followed by a numeral key. OPR FUNC is reset when the requested function is performed.

"INPUTS"—The "inputs" flag indicates that the operator wants to present "inputs" (data) to the apparatus. The "inputs" flag is set when the operator touches the "f" key followed by one of the display keys, DIR/-SPEED, SET/DRIFT, LAT/LONG, GRI/TD, or TIME/CTS/D. When the input request is serviced the flag is reset.

"DSP MODE LST"—The "display mode for last key touched" flag holds the code of the last display key (see list in preceding paragraph) touched. This flag is set in the keyboard-interrupt service routine when the key is touched. The flag is never reset, but rather is overwritten by the next display-key interrupt (and accordingly might more properly be called a register than a flag). This flag is referenced when the display is being generated.

"DSP MODE NTL"—The "display mode for next-to-last key touched" flag holds the code of the next-to-last display key touched. Whenever a display-key interrupt occurs, the value in DSP MODE LST is put into DSP MODE NTL. This value too is never reset—only overwritten—and is referenced when the display is being generated.

"INPUT KEY"—The "last key input" byte holds the code of the last key touched. It is set and overwritten in the keyboard-interrupt service routine. It is referenced by the numeric input subroutines and those elements of code that rely on individual keystrokes.

The following discussion of input subroutines will be helpful.

"GET POS"—The "get position" subroutine performs the task of inputting a position from the user, either as a "marked" position (using the N, S, E, and W keys and the MARK key) or numerically (using the numeral keys to enter latitude and longitude or GRI and TD). These two methods of input must be selectable by some flags in the calling sequence, on one call to GET POS. For example, one flag may indicate that only input by "marking" position is permitted, another that only input by latitude and longitude (or GRI and TD) is permitted, or yet another flag may indicate that input by either method is permitted. This subroutine requires the presence of the local input/output devices—steppers and limit switches, keyboard, and display. The input conditions for the subroutine are the flags determining whether position entry is to be by "marking" and/or numerical entry. The output condition is that the position has been selected, in X and Y stepper increments (if entry is by "marking") and/or the position in degrees of latitude and longitude (if so entered) or equivalent. The "LASC" subroutine (see below) is used in conjunction with this one.

"INP NUM"—The "input a number" subroutine performs the task of inputting a number of fixed maximum magnitude and fixed precision (number of decimal places) from the user. The number may be unsigned (always positive), or signed by "+" or "−", or signed by "E" or "W", or signed by "N" or "S". This subroutine requires the keyboard and display. The input conditions are a flag to determine what kind of sign (if any) is to be used, and values dictating the total number of digits in the number and the number of digits to the right of the decimal point. The output condition is that the numerical input has been received from the user. The "FASC" subroutine (see below) is used in conjunction with this one.

"GET YN"—The "get a yes or no answer" subroutine has the task of inputting either a Y or an N from the operator. The subroutine requires keyboard and display. Its input condition is a flag to hold true (OFFH) for yes or false (OOH) for no, and its output condition is that the flag holds true or false.

"FASC"—The "floating point to ASCII" subroutine performs the task of converting a floating-point number to an ASCII representation with variable sign (+−, NS, EW, or none), variable length, and variable precision. The subroutine requires no noncomputer hardware. Its input conditions are (1) flags to determine the sign used, ASCII representation length, and ASCII representation precision, (2) the floating-point number to be converted, and (3) the buffer to hold the ASCII representation. The subroutine's output condition is that the ASCII representation is in its buffer unless the number was too large to fit, in which case all the digit positions in the buffer are filled with nines.

"LASC"—The "latitude or longitude to ASCII" subroutine performs the task of converting a floating-point number into either a standard latitude format (namely, "XX-XX.XXS", in which "X" is a digit and "S" is the sign N for north or S for south) or a standard latitude format (namely, "XXXXX.XXS", in which "X" is a digit and "S" is the sign E for east or W for west). The subroutine has no external-hardware requirements. Its input conditions are the number to be converted, the buffer to hold the ASCII representation, and a flag to determine whether the number is latitude or longitude. The output condition is that the buffer holds the ASCII representation.

The numbered functions "f0" through "f94" described in subsection 4a above, and certain other functions not mentioned earlier, have the function names (used in the programming diagrams) and purposes indicated below.

f0 "ENT PP"—enter the present position
f1 "ENT DEST"—enter some way points
f2 "ENT SET DRIFT"—enter the set and drift
f10 "DSP GMT"—continuously display Greenwich mean time
f11 "DSP CTE"—continuously display cross-track error
f12 "DSP BRG DIST"—continuously display bearing and distance to some point
f50 "COMPASS DAMPING"—adjust the damping factor on incoming compass data
f51 "SPEED DAMPING"—adjust the damping factor on incoming speedometer data
f52 "MAG VARY MAINT"—adjust the local magnetic variation as tabulated
f53 "CHRT TBL MAINT"—maintain the RAM chart table
f55 "AUTO LOG INTRVL"—set the interval for printing of the automatic log
f90 "MEM MAINT"—recover from total memory loss (invoke functions 91 through 94)
f91 "BRG"—set the flag for bearings true, magnetic or relative
f92 "DISP HDG"—set the flag for heading displays true, magnetic or relative
f93 "ENT DEV TBL"—enter the compass deviation table
f94 "TIME SET"—set the internal clock calendar
f96 "KNT CALIB"—calibrate the speedometer

Those functions that appear in this list but are not discussed earlier are not essential to operation of the preferred embodiment, but are included here because they appear in the accompanying Chapin diagrams.

FIGS. 29 and 30 are merely format samples intended to explicate the Chapin-diagram format and notation used in FIGS. 31 et seq. Study of FIGS. 29 and 30 will be facilitated by reference to the computer-programming literature on Chapin diagrams, particularly Reducing Cobol Complexity with Structured Programming by D. McClure or Flowcharts by Ned Chapin.

Although the Chapin diagrams are self-explanatory—given the information presented above and in the format samples—it may be helpful to note that the programming as represented in these diagrams accords with one of the important principles of the present invention: all craft-position calculations should be performed in earth-surface coordinates. Only for purposes of map display (or for purposes of "marking"-style data input) should the map-transport mechanism operation or the map projection function (e.g., the Mercator function) be considered. In FIG. 71, at line 8, right-hand side, the entry is "Move chart to present position." It is only at this step, and not before, in the generation of DR-controlled or Loran-controlled map display, that the transport mechanism, map scale, and projection function are brought into play (using, if a Mercator chart is employed, the relationships given in FIG. 26 and the associated text). All prior steps use latitude and longitude or equivalent earth-surface position coordinates.

As described in detail above, the practice of the present invention requires reduction to mathematical methods of certain navigational operations that have traditionally been performed using graphical methods. Sufficient details are presented here to enable persons skilled in the computer-programming art to accomplish this task. Further insights into the navigational operations may, however, be obtained by study of BOWDITCH'S AMERICAN PRACTICAL NAVIGATOR, a book published by the Defense Mapping Agency Hydrographic Center (Pub. No. 9).

It is to be understood that all of the foregoing detailed descriptions are by way of example only, and not to be taken as limiting the scope of the present invention—which is expressed only in the appended claims.

I claim:

1. A navigational apparatus for use with a craft, said apparatus comprising:
an optical projection system having an optical path terminating in a visible display field;
an optically projectable map locatable in the optical path of said projection system, said map providing a scaled representation of a geographical area and including at least two calibration indicia at respective positions on said map corresponding to predetermined known coordinates,
map transport means for controllably effecting relative movement between said map and said projection system in accordance with applied transport control signals;
map calibration means for for moving said calibration indicia to a predetermined position within said projection system and for then coordinating said known coordinates with the position of the map transport means to derive calibration data used in thereafter generating transport control signals; and
transport drive means for generating said transport control signals in accordance with said calibration data and in accordance with supplied craft position data to vary said map position relative to said projection means in accordance with the geographic position of said craft.

2. The apparatus of claim 1 wherein said map calibration means and said transport drive means comprise a common processor means, responsive to said supplied craft position data and to supplied desired point data for generating course signals indicative of the course required to steer said craft to said desired point.

3. The apparatus of claim 1 wherein said transport drive means includes dead reckoning means responsive to said craft position data and to input signals indicative of at least two of heading, speed, set and drift parameters related to the craft's travel for generating signals indicative of calculated updated craft present position data.

4. The apparatus of claim 3 wherein said transport drive means includes processor means responsive to said calculated updated craft present position data and to signals indicative of the actual course made good by said craft for generating said input signals indicative of set and drift parameters and for also updating said craft present position data in accordance with said actual course made good.

5. The apparatus of claim 4 wherein said transport drive means includes means responsive to signals indicative of Loran fixes for generating said input signals indicative of the actual course made good.

6. The apparatus of claim 4 wherein said transport drive means includes means responsive to input signals indicative of bearing fixes for generating said input signals indicative of the actual course made good.

7. The apparatus of claim **1** wherein said transport drive means is responsive to input signals indicative of bearing fixes for generating input signals indicative of the actual position of said craft as said supplied craft position data.

8. The apparatus of claim **1** wherein said map includes a plurality of said calibration indicia and wherein said apparatus further comprises means for storing reference data including the coordinates of said calibration indicia.

9. The apparatus of claim **8** wherein said reference data includes the coordinates of a plurality of calibration indicia on said map and magnetic variation data in respect of at least a portion of said geographical area.

10. The apparatus of claim **9** wherein said map includes said calibration indicia at two corners of said map.

11. The apparatus of claim **1** wherein said optically projectable map comprises a film transparency and wherein said map transport means includes a film mount adapted to receive said map and a carriage mechanism for removably receiving said film mount and for controllably effecting relative movement between said film mount and said optical projection system, said film mount comprising:

first and second outer frames, each including a cut out portion, a transparent glass sheet disposed in each frame covering said cutout portion and chart locating projections disposed to align said film transparency with respect to said cut out portion; and

means for securing said frames together with said film transparency sandwiched therebetween in alignment and therewith viewable through said cut out portion.

* * * * *

United States Patent [19]

Hackett, Jr.

[11] **Patent Number: 4,513,383**

[45] **Date of Patent: Apr. 23, 1985**

[54] **SEPARATION OF COMMUNICATION SIGNALS IN AN ADAPTIVE ANTENNA ARRAY**

[75] Inventor: **Charles M. Hackett, Jr.**, Irvine, Calif.

[73] Assignee: **Rockwell International Corporation**, El Segundo, Calif.

[21] Appl. No.: **305,296**

[22] Filed: **Sep. 24, 1981**

[51] **Int. Cl.**[3] **G06F 15/20**; G01S 3/46

[52] **U.S. Cl.** ..... **364/517**; 343/5 DP; 343/5 NQ; 364/570; 364/582

[58] **Field of Search** ..... 364/516, 517, 570, 573, 364/581, 582; 343/5 DP, 5 NQ, 370, 372

[56] **References Cited**

U.S. PATENT DOCUMENTS

4,099,075	7/1978	Goldberg et al.	364/517 X
4,117,538	9/1978	Shrader et al.	364/581 X
4,180,814	12/1979	Barton	343/5 DP
4,234,939	11/1980	Grall	364/517 X

OTHER PUBLICATIONS

Bershad et al.: Sonar Array Detection of Gaussian Signals in Gaussian Noise of Unknown Power. IEEE Transactions on Aerospace and Electronic Systems vol. AES-10 No. 1 Jan. 1974, pp. 94–99.

Applebaum: Adaptive Arrays, IEEE Transactions on Antennas and Propagation vol. AP-24 No. 5 Sep. 76 pp. 585/598.

White: Cascade Preprocessors for Adaptive Antennas, IEEE Transactions on Antennas and Propagation, vol. AP-24, No. 5, Sep. 1976, pp. 670–684.

White: Adaptive Cascade Networks for Deep Nulling, IEEE Transactions on Antennas and Propagation, vol. AP-26, No. 3, May 1978, pp. 396–402.

Hackett, Jr.: Adaptive Arrays can be used to Separate Communication Signals, IEEE Transactions on Aerospace and Electronic Systems, vol. AES-17, No. 2, Mar. 1981, pp. 234–247.

Corrections to above AES-17 No. 4 Jul. 1981 p. 606

Primary Examiner—Felix D. Gruber

Attorney, Agent, or Firm—V. Lawrence Sewell; Howard R. Greenberg; H. Fredrick Hamann

[57] **ABSTRACT**

Method and apparatus are disclosed for separating radio frequency signals incident upon an array of antenna elements which has available from each of the elements an input signal capable of being processed by the method and apparatus. The processing includes combining the input signals according to a first set of complex weights, thereby providing a first output signal. The first set of weights is derived from the input signals and from the first output signal and converges to the eigenvector corresponding to the largest eigenvalue of the cross-correlation matrix of the complex envelopes of the input signals. The input signals are also combined according to a second set of complex weights to provide a second output signal. The second set of weights is derived from the input signals, from the second output signal and from the first set of weights. The second set of weights converges to the eigenvector corresponding to the second largest eigenvalue of said cross-correlation matrix. As a result of this processing, the first and second output signals respectively, correspond, in general, to the first and second most powerful signals incident on the array. Additional sets of weights can be developed to separate any additional signals.
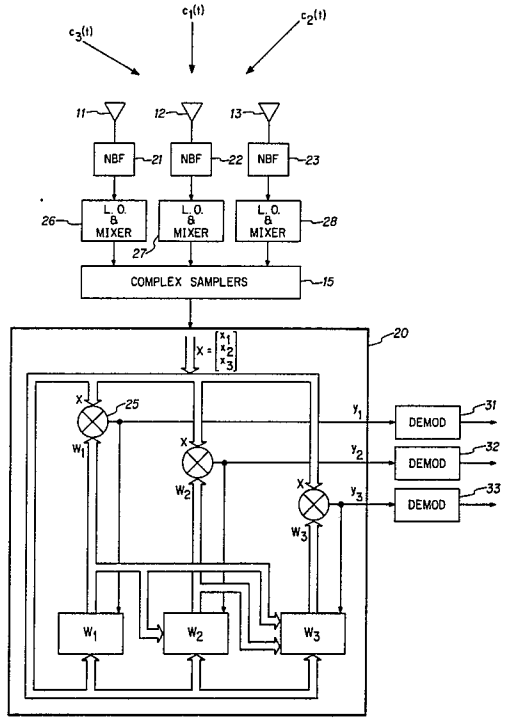
11 Claims, 3 Drawing Figures