(12) INTERNATIONAL APPLICATION PUBLISHED UNDER THE PATENT COOPERATION TREATY (PCT)

(19) World Intellectual Property Organization
International Bureau

(43) International Publication Date
23 November 2006 (23.11.2006)

PCT

(10) International Publication Number
WO 2006/123292 A2

(51) International Patent Classification:
H04N 5/76 (2006.01)

(21) International Application Number:
PCT/IB2006/051540

(22) International Filing Date: 16 May 2006 (16.05.2006)

(25) Filing Language: English

(26) Publication Language: English

(30) Priority Data:
05104213.3 18 May 2005 (18.05.2005) EP

(71) Applicant *(for all designated States except US)*: **KONINKLIJKE PHILIPS ELECTRONICS N.V.** [NL/NL]; Groenewoudseweg 1, NL-5621 BA Eindhoven (NL).

(72) Inventor; and

(75) Inventor/Applicant *(for US only)*: **WOOLGAR, David, J.** [GB/GB]; c/o Philips Intellectual Property, & Standards, Cross Oak Lane, Redhill Surrey RH1 5HA (GB).

(74) Agents: **WHITE, Andrew, G.** et al.; c/o Philips Intellectual Property, & Standards, Cross Oak Lane, Redhill Surrey RH1 5HA (GB).

(81) Designated States *(unless otherwise indicated, for every kind of national protection available)*: AE, AG, AL, AM, AT, AU, AZ, BA, BB, BG, BR, BW, BY, BZ, CA, CH, CN, CO, CR, CU, CZ, DE, DK, DM, DZ, EC, EE, EG, ES, FI, GB, GD, GE, GH, GM, HR, HU, ID, IL, IN, IS, JP, KE, KG, KM, KN, KP, KR, KZ, LC, LK, LR, LS, LT, LU, LV, LY, MA, MD, MG, MK, MN, MW, MX, MZ, NA, NG, NI, NO, NZ, OM, PG, PH, PL, PT, RO, RU, SC, SD, SE, SG, SK, SL, SM, SY, TJ, TM, TN, TR, TT, TZ, UA, UG, US, UZ, VC, VN, YU, ZA, ZM, ZW.

(84) Designated States *(unless otherwise indicated, for every kind of regional protection available)*: ARIPO (BW, GH, GM, KE, LS, MW, MZ, NA, SD, SL, SZ, TZ, UG, ZM, ZW), Eurasian (AM, AZ, BY, KG, KZ, MD, RU, TJ, TM), European (AT, BE, BG, CH, CY, CZ, DE, DK, EE, ES, FI, FR, GB, GR, HU, IE, IS, IT, LT, LU, LV, MC, NL, PL, PT, RO, SE, SI, SK, TR), OAPI (BF, BJ, CF, CG, CI, CM, GA, GN, GQ, GW, ML, MR, NE, SN, TD, TG).

Declaration under Rule 4.17:

— *as to applicant's entitlement to apply for and be granted a patent (Rule 4.17(ii))*

Published:

— *without international search report and to be republished upon receipt of that report*

For two-letter codes and other abbreviations, refer to the "Guidance Notes on Codes and Abbreviations" appearing at the beginning of each regular issue of the PCT Gazette.

(54) **Title:** PRESENTATION OF CONTENT AT A CLIENT DEVICE

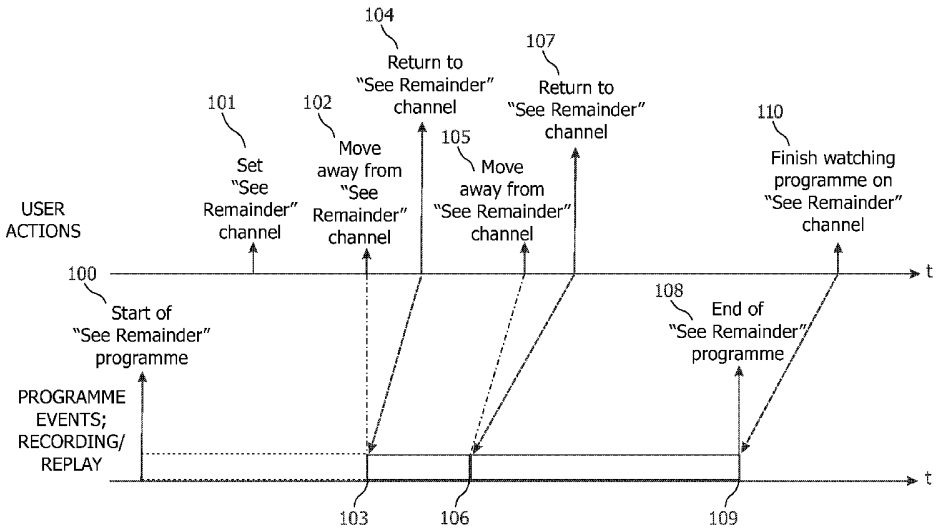

(57) **Abstract:** A client device (10), such as a Personal Video Recorder (PVR), is capable of receiving a plurality of content channels. The device receives an input (101) indicating that the user wishes to experience the selected content channel without missing any of the content. The device then determines (102) when the user navigates away from the selected content channel and causes, from that point in time, the selected content channel to be buffered (103). The content can be buffered locally, at the client device, or at a server. When the user returns to the selected content channel (104) the device resumes play back of the selected content channel from the point in time (103) where the user navigated away from the selected content channel.

WO 2006/123292 A2

DESCRIPTION

PRESENTATION OF CONTENT AT A CLIENT DEVICE

This invention relates to presentation of media content at a client device, such as a personal video recorder (PVR), interactive television or similar device.

Personal video recorders (PVR), also known as personal digital recorders (PDR) or digital video recorders (DVR), are becoming increasingly commonplace in the marketplace. Typically, these machines have a high-capacity storage device, such as a hard disk, which stores media content received from a source, such as a broadcast channel or streamed content received from a networked server. The use of a storage device of this kind can support conventional playback manipulation features such as pause and rewind and can also allow a user to watch the beginning of a recorded programme while, simultaneously, the remainder of the programme is still being recorded.

Channel hopping is a regular habit of many TV viewers. When a user channel hops they may miss part of the programme that they were just watching. For example, a user watches a programme on a commercial channel. During the advertisement break they channel hop to pass the time and then return to the commercial channel, accidentally missing the beginning of the subsequent segment of the programme that they were watching. In another example, a user watches a movie on a movie channel but changes the channel to watch the news headlines at the top of the hour on a news channel. This causes the user to miss part of the movie that they were watching.

It is possible to initiate a recording of a channel before channel hopping using a normal programming method but users typically find programming to be a difficult operation and would prefer to suffer the loss of part of their programme rather than to struggle to initiate a recording.

The present invention seeks to provide an improved way of supporting channel hopping.

Accordingly, a first aspect of the present invention provides a method of presenting content to a user at a client device which is capable of receiving a plurality of content channels comprising:

receiving a selected content channel and outputting content from the channel for presentation to a user;

receiving an input indicating that the user wishes to experience the selected content channel without missing any of the content; and,

determining when the user navigates away from the selected content channel and causing, from that point in time, the selected content channel to be buffered.

The user only needs to provide an indication that they wish to watch the current programme, or channel. The method automatically records the channel should the user navigate away from that channel, thus ensuring that the user does not miss the remainder of content shown on the selected channel. Preferably the method automatically resumes playback of the selected channel when a user returns to that channel. This helps to overcome user's traditional uncertainty in operating recording and programming features, which now become transparent to the user. Alternatively, the user may prompt the recording device to begin playback of the recording by pressing a control on a user interface. Playback of the recording of the selected content channel begins from the point in time where the user navigated away from the selected content channel. Preferably this function is activated by a single control, thereby simplifying operation to a user, and can be accompanied by an on-screen icon.

The buffering of content can be implemented at the client side using storage in a device such as a PVR, conventional video cassette recorder (VCR), set-top box, television set, personal computer, media player or home media server. The storage can take the form of a hard disk, (re)writable disk, solid state memory, tape or other form of storage. This implementation is most

appropriate where the content channels are broadcast channels, or where the client prefers to store the content locally to them. Preferably, the device is capable of simultaneously recording the selected content channel while replaying the same content channel from an earlier point in time, although this is not essential. Alternatively, where the content is delivered from a server and the flow of content can be controlled, it is possible to buffer the content at the server and to deliver content to the client device when it is required. This can avoid the need for a buffer at the client.

The feature is preferably used on a per-programme basis, so that the indication that a user wishes to experience a selected content channel lasts only for the duration of the current programme on that channel. This causes the remainder of the current programme on the selected content channel to be buffered. At the end of that programme buffering ends.

Most usefully, the feature can be invoked by a user while watching a programme on the selected content channel, such as by pressing a control on a user interface. Alternatively, a user can preselect a particular content channel, or a programme on a content channel, in advance as a user preference for this feature. Whenever a user is experiencing the content channel which has been preselected, or the preselected programme on that channel, and navigates away from the channel the client device causes the content channel to be buffered. This can be useful if the user is an avid viewer of a particular programme, or content channel, and prefers not to miss any content on that channel while they are viewing it. It should be noted that this is different to instructing the device to record a programme. Content is only buffered if the user is watching the channel and then navigates away from it. Should the user not initially start to watch the channel or programme which has been preselected, the device will not cause content to be buffered.

Further aspects of the invention provide a controller which causes a client device to perform this method and a client device incorporating the controller. The client device can be a media content recording device such as a personal video recorder (PVR), a personal digital recorder (PDR), a digital video recorder (DVR) or any other host equipment which supports this feature,

such as a set-top box, television set, personal computer, media player or media server.

Still further aspects of the invention provide a method of operating a server and a controller which causes a server to perform this method.

While the content is most likely to be audio-video content, such as a television channel, it could also be an audio-only content channel (such as a broadcast radio channel or a streamed audio channel) or an audio channel with accompanying data information about the broadcast or stream.

The functionality described here can be implemented in software, hardware or a combination of these. The invention can be implemented by means of hardware comprising several distinct elements, and by means of a suitably programmed processing platform. Accordingly, another aspect of the invention provides instructions (software) for causing a processor to implement the method. The instructions may be stored on an electronic memory device, hard disk, optical disk or other machine-readable storage medium. The software may be downloaded directly to the client device via a network connection.

Embodiments of the present invention will now be described, by way of example only, with reference to the accompanying drawings, in which:-

Figure 1 shows a recording device which implements an embodiment of the invention;

Figure 2 shows a user interface used with the recording device of Figure 1;

Figure 3 shows a flow chart illustrating operation of the "See Remainder" feature;

Figure 4 shows a timeline further illustrating operation of the "See Remainder" feature; and,

Figure 5 shows an embodiment of the invention where buffering of content is performed server-side.

Figure 1 schematically shows an embodiment of the present invention based on a Personal Video Recorder (PVR) 10. A processor (central

processing unit CPU) 16 executes a control application 20 which resides in a memory 18. In this embodiment the control application 20 and processor 18 form a controller for the PVR. However, it will be appreciated that the controller can be implemented entirely in hardware as an Application Specific Integrated Circuit (ASIC), a programmable array or other logic circuit. The CPU 16 and memory 18 are operatively connected via a bus 15 that also operatively interconnects other PVR components including first and second tuners 12, 13, a user interface 22 and an internal storage device 24 such as a high-capacity hard drive. The internal storage device 24 can be used to store content for later presentation and to provide, during normal viewing, a time shift buffer which supports various trick presentation modes such as pause, rewind etc. The normal operation of PVRs is well documented and will be understood by a skilled person.

Tuners 12, 13 are used to receive channels of media content from an external source. Figure 1 shows an antenna 11 receiving broadcast television channels. In general, the received media content can include audio/video content channels or streams of content which are received via a satellite, cable, terrestrial or an Internet Protocol (IP) based delivery medium. Tuners 12, 13 are controllable to select a particular channel that a user wishes to view. The channel of interest can be selected by an input received from a user via the user interface 22. A demodulator/decoder 14 demodulates and decodes a selected channel for viewing or reception. The demodulator/decoder can also include a decryption function for decrypting content which has been transmitted in an encrypted format. An output interface 28 converts AV data into a suitable format for presentation by a display and an audio system; this can include generating an analogue video signal (in component or composite format) and analogue or digital audio outputs or an entirely digital output signal such as one conforming to the High-Definition Multimedia Interface (HDMI) specification.

User interface 22 can take the form of an operating panel mounted on the PVR 10 or a remote control (40, Figure 2). The remote control can have a

graphical user interface (GUI) or may use a video overlay to display user selectable options on a display connected to the PVR 10.

The features of the control application 20 relevant to the present invention will now be described. In summary, the user can specify that they want to see the remainder of the entire programme on a particular channel that they are currently watching. This will be termed herein the "See Remainder" feature. If the user 'hops' to another channel their "See Remainder" programme is cached to storage 24. If the user then hops back to the "See Remainder" channel they are taken back to the point in their "See Remainder" programme where they hopped away. This is different to a recording function, such as a one touch recording function, since the "See Remainder" programme is only recorded if the user navigates away while viewing the designated "See Remainder" programme.

The user can channel hop as many times as they like, for as long as they like, because the "See Remainder" programme will be recorded to storage 24 when it is not being presented. In a default mode of operation it is assumed that the user wishes to view the current programme on the particular channel. The controller will terminate recording at the end of the current programme on that channel. Programme schedule information obtained from an Electronic Programme Guide (EPG) can provide duration/end time information which is used to end the recording at the appropriate time.

There are various ways of providing a user with controls for the "See Remainder" feature. A particularly advantageous embodiment of the invention provides a single control, such as a single button on a remote control, which can be used to set the "See Remainder" feature. Figure 2 shows a simplified remote control 40 which includes channel change controls 41 and a control 42 to activate the "See Remainder" feature. By pressing this control 42, the controller is informed that the current programme should be recorded in the event that the user navigates away from that programme. Pressing the control 42 can cause an icon 46 to be displayed on-screen 45 so the user is aware of the status of the function. When a user navigates away from the "See Remainder" channel, such as to watch a news programme on another

channel, a recording is automatically started of their “See Remainder” programme. If the user presses the "See Remainder" control again whilst watching the "See Remainder" channel, the feature is switched off. If the user presses the "See Remainder" control whilst watching another channel, that channel becomes the new "See Remainder" channel and any recording that was being made is discarded.

Figure 3 shows a flow chart of a method of providing the “See Remainder” feature. This embodiment uses the single “See Remainder” control described above. The method begins in a state 80 where a user is viewing a channel received at the PVR 10. The left hand leg of the chart (steps 82-86) sets the “See Remainder” channel. Step 81 monitors if the “See Remainder” control has been pressed. If the “See Remainder” control has been pressed, step 82 determines if there is an existing “See Remainder” channel, i.e. if the user has already set a “See Remainder” channel. If there is no current “See Remainder” channel then the current channel is set as the “See Remainder” channel at step 83. If it was determined, at step 82, that there is an existing “See Remainder” channel it is determined, at step 84, if there is an existing “See Remainder” recording in progress. If a recording is in progress, the recording is cancelled at step 85 and the “See Remainder” channel number is cleared at step 86. If no recording is in progress then the controller proceeds directly to clear the currently stored “See Remainder” channel number at step 86.

The right hand leg of the flow chart (steps 87-96) describes the steps which occur following a channel change operation. Step 87 detects when the user changes the channel. When a channel change is detected at step 87 the controller proceeds to step 88 and determines if the channel change moves away from the “See Remainder” channel by comparing the new channel number with the stored number of the “See Remainder” channel. If the user has moved away from the “See Remainder” channel the controller begins recording the “See Remainder” channel and sets a resume point. The resume point defines the point at which replay of the “See Remainder” content will resume when the user wishes to return to that channel. The PVR 10 receives

media content from the "See Remainder" channel via tuner 12, demodulates/decodes the received data and routes the data to a storage location within storage device 24. Meanwhile, tuner 13 is used to display the new channel selected for viewing by the user. At step 90 the channel change occurs. If the newly selected channel is not a "See Remainder" channel (detected at step 91), i.e. the user navigates to another channel which is not the "See Remainder" channel, the controller returns to step 80. If, at step 91, it is determined that the channel change operation returns to the "See Remainder" channel the controller proceeds to step 92 and begins to replay the "See Remainder" channel from the resume point previously set. The controller replays data representing the "See Remainder" programme from storage 24 via the output interface 28. If the "See Remainder" programme has not finished, then the controller will simultaneously record the "See Remainder" programme while replaying an earlier portion of the programme. The controller remains in a state of replaying the recording at step 92 until the user either changes the channel again, or presses the "See Remainder" control. If it is determined, at step 93, that the user navigates to another channel the controller proceeds to step 94. A resume point is stored (i.e. the point in time in the recording where replay should be resumed when the user returns to the recording) and the channel is changed. If it is determined, at step 95, that the "See Remainder" control is pressed then the recording of the "See Remainder" channel is cancelled and the value of the "See Remainder" channel is cleared. In both cases the controller returns to the state of viewing the current channel at step 80.

When a user watches a recording of a programme from their "See Remainder" channel and the recorded content comes to an end, it is preferred that the controller presents the user with live content on the "See Remainder" channel. The controller may present an indication to the user of this event via the display.

Figure 4 shows a timeline of operations which further illustrates use of the "See Remainder" feature. The upper line shows user actions over a period of time and the lower line shows programme events and recording/replay

actions of the PVR. At point 100 a programme begins, which the user wishes to view. At point 101 the user presses the "See Remainder" control to indicate to the controller that they wish to view all of this programme. At point 102 the user channel hops away from the "See Remainder" channel. At this point the controller initiates a recording of the "See Remainder" programme which begins at point 103. A resume marker is set at point 103 in the recording as the user needs to watch the recording from this point. At point 104 the user returns to the "See Remainder" channel. The controller begins to replay the recording of the "See Remainder" channel from resume point 103. From this point in time the user is watching a recording of the "See Remainder" channel since the live version of the "See Remainder" channel is ahead of the recording. At a later time 105 the user again channel hops away from the "See Remainder" channel (recording). Again, a resume marker is set at point 106 as the user will need to watch the recording from this point. At point 107 the user returns to the "See Remainder" channel. The controller begins to replay the recording of the "See Remainder" channel from resume point 106. At time 108 the "See Remainder" programme ends and the controller ends the recording 109. The controller continues to replay the previously recorded segment of the "See Remainder" programme until point 110, when the programme comes to an end. During replay of the recorded "See Remainder" programme a user can use the normal PVR functions of rewind, pause or fast forward (advance). Depending on the amount of fast forward activity, the replayed version of the "See Remainder" programme may catch up with the live version of the programme.

Figure 4 shows an embodiment where the PVR begins to record content on the "See Remainder" channel as soon as the user hops away from the content channel. However, where the "See Remainder" channel is a commercial channel which carries advertisements during commercial breaks, this will cause the user to be presented with those commercial breaks when the recording of the "See Remainder" channel is replayed. Two strategies for skipping advertisement breaks will be described.

A first strategy is to cause the recording device to begin recording the selected content channel at the end of an advertisement break. Referring to Figure 4, it is assumed that time 102 represents the start of an advertisement break on the "See Remainder" channel. Rather than starting the recording at time 103, the recording is delayed until the end of the advertisement break. Methods of detecting advertisement breaks are well documented. If a broadcaster includes codes signalling the start and end of advertisement breaks, these can be directly used. If the broadcaster does not include such codes, the PVR can use known techniques such as sensing an advertisement break by detecting 'n' frames of AV data meeting certain criteria, such as increased volume level.

A second strategy is to record all of the selected content channel (including advertisement breaks) and to provide the user with the option to skip, or fast forward through, the advertisement breaks. The term 'useful content' is primarily intended to mean content other than advertisements, although the types of content which the recording device should regard as useful (or non-useful) can be set by the user, such as by using on-screen menus presented by the user interface 22.

The above embodiment describes the "See Remainder" function as a feature which is manually activated by a user while they are watching live content. In an alternative embodiment the "See Remainder" feature can be set as a user preference for a particular programme. For example, the user sets the "See Remainder" feature for a particular soap opera that the user is an avid viewer of. Whenever the user is watching that soap opera and channel hops away from that programme, the soap opera is cached to storage in the manner described above. When the user returns to the channel broadcasting that soap opera, the controller replays the recording from the point at which the user channel hopped away from it.

The above described embodiment uses two tuners 12, 13. This allows the PVR to record content from any channel while simultaneously allowing the user to view any other channel off air. If more than two tuners are used then more than one channel can be recorded while a user views another channel.

The general rule is (no. of recordings) < (no. of tuners). Although two tuners 12, 13 are preferred, it is possible for a product to implement the feature with a single tuner. Digital television carries a set of channels together in a multiplex. A tuner will receive a multiplex carrying the channel of interest. This will also make other channels on the same multiplex available to the demodulating/decoding function. With a single tuner it is possible for the PVR to record one channel while the user views another channel carried by the same multiplex as that carrying the channel which is being recorded.

In the above described embodiment the "See Remainder" feature is activated on a per programme basis, so that when the user activates the "See Remainder" control the "See Remainder" function lasts for the duration of the current programme on the channel that the user is watching. As an enhancement to this embodiment, the "See Remainder" function can override a user's actions to put the PVR 10 into standby mode. The "See Remainder" function causes the PVR to remain in operation until recording of the current "See Remainder" programme has finished, after which the PVR enters normal standby mode. Should a user attempt to put the PVR into standby while the PVR is still recording, the standby command will be overridden until the programme finishes. The user is then able to finish watching the "See Remainder" programme, in full, the next time they turn the PVR on. Referring again to the timeline of Figure 4, should a user attempt to put the PVR into standby between time 107 and time 108, the PVR will remain in operation, recording the "See Remainder" programme until the programme finishes at time 108.

Digital Television services typically broadcast programme information alongside the programme content. This supports a feature where a user can obtain information about the programme that is currently showing and the next programme to be shown on that channel. By providing the "See Remainder" feature described above, a time lag will occur between the programme currently being broadcast live on the "See Remainder" channel and the "See Remainder" programme which has been cached to storage 24. This time lag can cause a difference between the programme currently being broadcast live

on the “See Remainder” channel and the “See Remainder” programme which has been cached to storage 24. The Now/Next programme guide information which is presented to a user can be modified to show both the live version of the "See Remainder" channel and the recorded version of the "See Remainder" channel. A user can use the user interface to select the “See Remainder” programme recording or the live version of the channel, which may either be showing a later part of the "See Remainder" programme or a subsequent programme.

Figure 5 shows an embodiment of the invention where buffering of content is performed at a server 120. In this embodiment, content is delivered to clients 150 by a server 120 via a delivery network 140. Server 120 has a store 126 of content. Content is retrieved from store 126 and formatted for transmission by a transmission formatting unit 124. A network interface 122 applies formatted content to network 140 and receives control signals from clients 150. A memory 130 stores user records 132 which each carry information about a particular client 150. This information includes a status flag (e.g. indicating that content is currently being streamed or buffered) and a resume point marker. In normal operation server 120 delivers content from store 126. When a user navigates away from the channel being streamed to them, client 150 sends a Buffer_Start control message 151 indicating that server 120 should temporarily suspend transmission of the channel. A resume point marker is set to the current point within the content, as previously described. The content can be buffered in secondary storage 125 or the flow of content from store 126 can be temporarily suspended. When a user returns to the channel, a Buffer_End control message 152 is sent by the client 150 to the server 120. Server 120 resumes transmission of the content from the place marked by the resume point marker.

It should be noted that the above-mentioned embodiments illustrate rather than limit the invention, and that those skilled in the art will be able to design many alternative embodiments without departing from the scope of the appended claims. In the claims, any reference signs placed between parentheses shall not be construed as limiting the claim. The words

"comprising" and "including" do not exclude the presence of other elements or steps than those listed in the claim. Where the system/device/apparatus claims recite several means, several of these means can be embodied by one and the same item of hardware.

In the description above, and with reference to the Figures, there is described a client device 10, such as a Personal Video Recorder (PVR), is capable of receiving a plurality of channels. The device receives an input 101 indicating that the user wishes to experience the selected content channel without missing any of the content. The device then determines 102 when the user navigates away from the selected content channel and causes, from that point in time, the selected content channel to be buffered 103. The content can be buffered locally, at the client device, or at a server. When the user returns to the selected content channel 104 the device resumes play back of the selected content channel from the point in time 103 where the user navigated away from the selected content channel.

CLAIMS

1. A method of presenting content to a user at a client device (10) which is capable of receiving a plurality of content channels comprising:

receiving a selected content channel and outputting content from the channel for presentation to a user;

receiving an input (101) indicating that the user wishes to experience the selected content channel without missing any of the content; and,

determining (102) when the user navigates away from the selected content channel and causing, from that point in time, the selected content channel to be buffered (103).

2. A method according to claim 1 further comprising receiving an input indicating that the user wishes to resume experiencing the selected content channel and beginning playback (103) of the selected content channel from the point in time where the user navigated away from the selected content channel.

3. A method according to claim 2 which detects when the user navigates back to the selected content channel and automatically begins playback of the selected content channel from the point in time where the user navigated away from the selected content channel.

4. A method according to claim 2 or 3 which sets a resume marker at a point in time of the selected content channel where the user navigated away from the selected content channel and uses the resume marker to return to that point in time.

5. A method according to any one of the preceding claims wherein the indication that a user wishes to experience a selected content channel lasts for the duration of the current programme on that channel and the method causes buffering to end at the end of the current programme on the selected channel.

6. A method according to claim 5 wherein the end of the current programme is determined using programme guide information.

7. A method according to any one of the preceding claims which further comprises displaying programme information about the next programme on the selected channel and supplementing the programme information with information about the buffered programme.

8. A method according to any one of the preceding claims wherein the indication that the user wishes to experience the selected content channel without missing any of the content is stored by a user in advance of experiencing the content channel.

9. A method according to any one of the preceding claims wherein if the user does not navigate back to the selected content channel to experience the buffered content in a current viewing session, the buffered content is retained for a subsequent viewing session.

10. A method according to any one of the preceding claims wherein the buffering is performed at the client device.

11. A method according to claim 10 wherein the client device simultaneously buffers content obtained from the selected content channel while replaying the same content channel from an earlier point in time.

12. A method according to claim 10 or 11 wherein the step of buffering the content channel buffers only useful content obtained from the content channel.

13. A method according to claim 12 wherein the useful content comprises content other than advertisements.

14. A method according to any one of claims 1 to 9 wherein the buffering is performed at a server and the step of determining when the user navigates away from the selected content channel comprises the client device signalling to the server to begin buffering the selected content channel.

15. A controller (16, 20) for a client device (10) which is operable to perform the method according to any one of claims 1 to 14.

16. A client device (10) incorporating a controller according to claim 15.

17. A client device (10) according to claim 16 further comprising a user interface (40) which includes a control (42) for selecting the content channel.

18. A method of operating a server for delivering content to client devices comprising:

streaming a selected content channel to a client device (10) for presentation to a user;

receiving a control signal from the client device (10) indicating that the server should begin buffering the selected content channel due to the user navigating away from the selected content channel;

buffering, from that point in time, the selected content channel;

awaiting a further control signal from the client device (10) indicating that the user has returned to the selected content channel and resuming streaming of the selected content channel.

19. A controller for a server which is operable to perform the method according to claim 18.

20. A server incorporating a controller according to claim 19.

21. Instructions for causing a processor to perform the method of any one of claims 1 to 14 or claim 18.

22. A machine-readable carrier storing the instructions of claim 21.

5

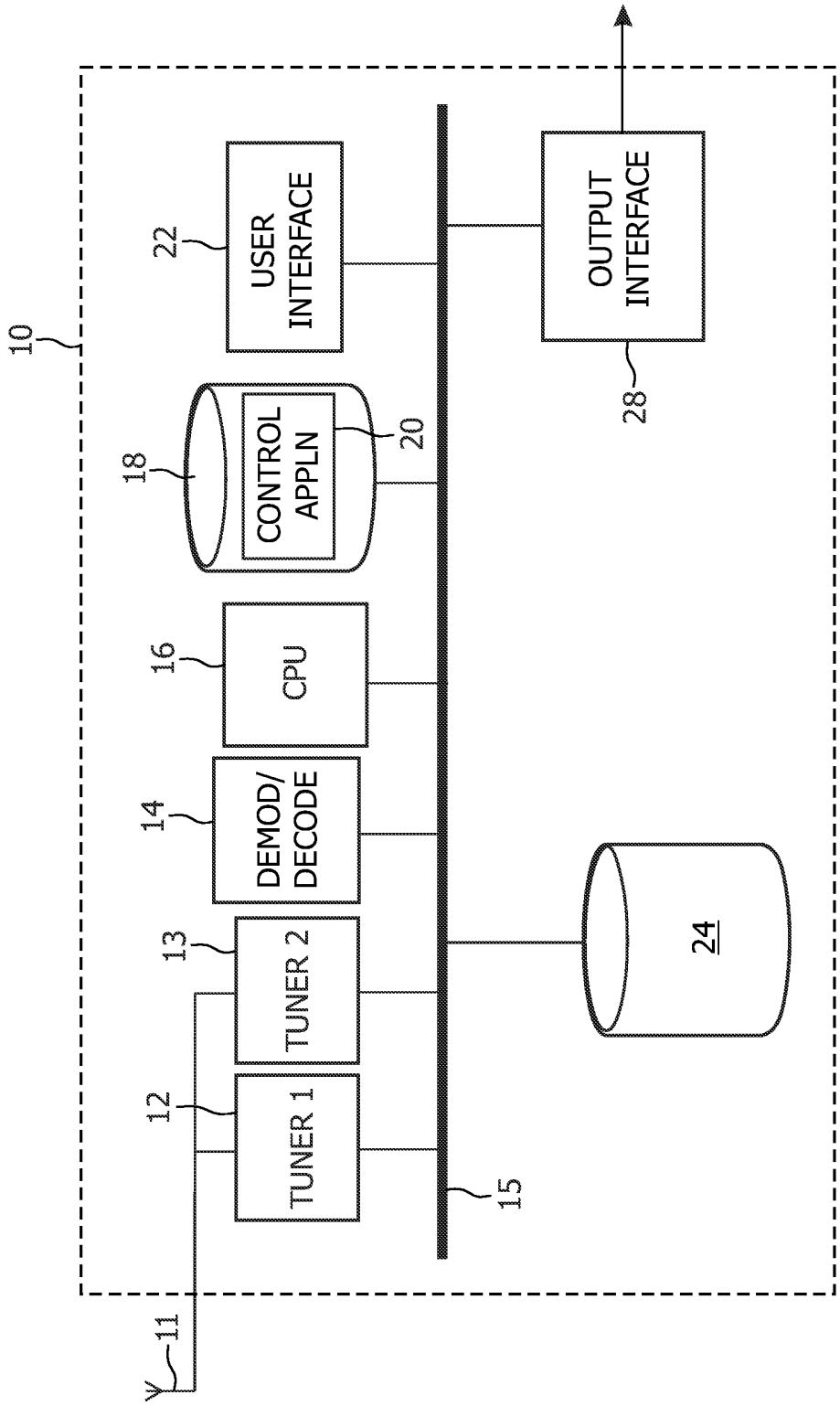
10
22
USER INTERFACE
OUTPUT INTERFACE
28
18
CONTROL APPLN
20
16
CPU
14
DEMOD/ DECODE
13
TUNER 2
12
TUNER 1
24
15
11

FIG. 1

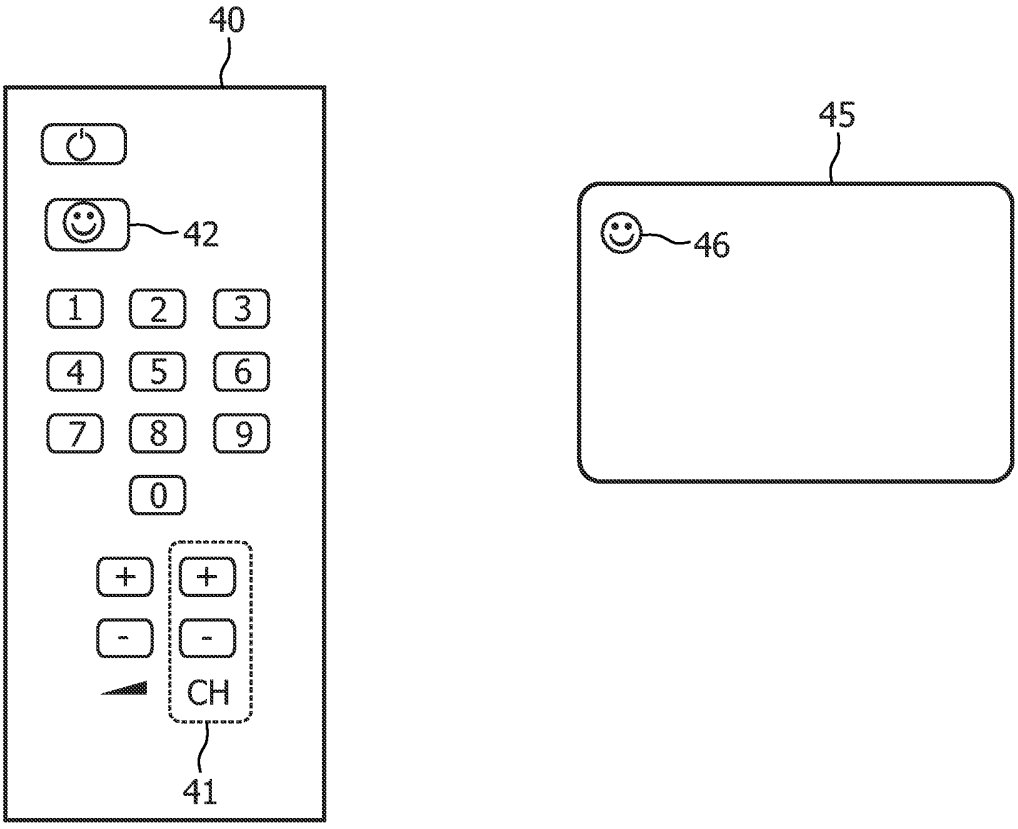

FIG. 2

FIG. 3-I

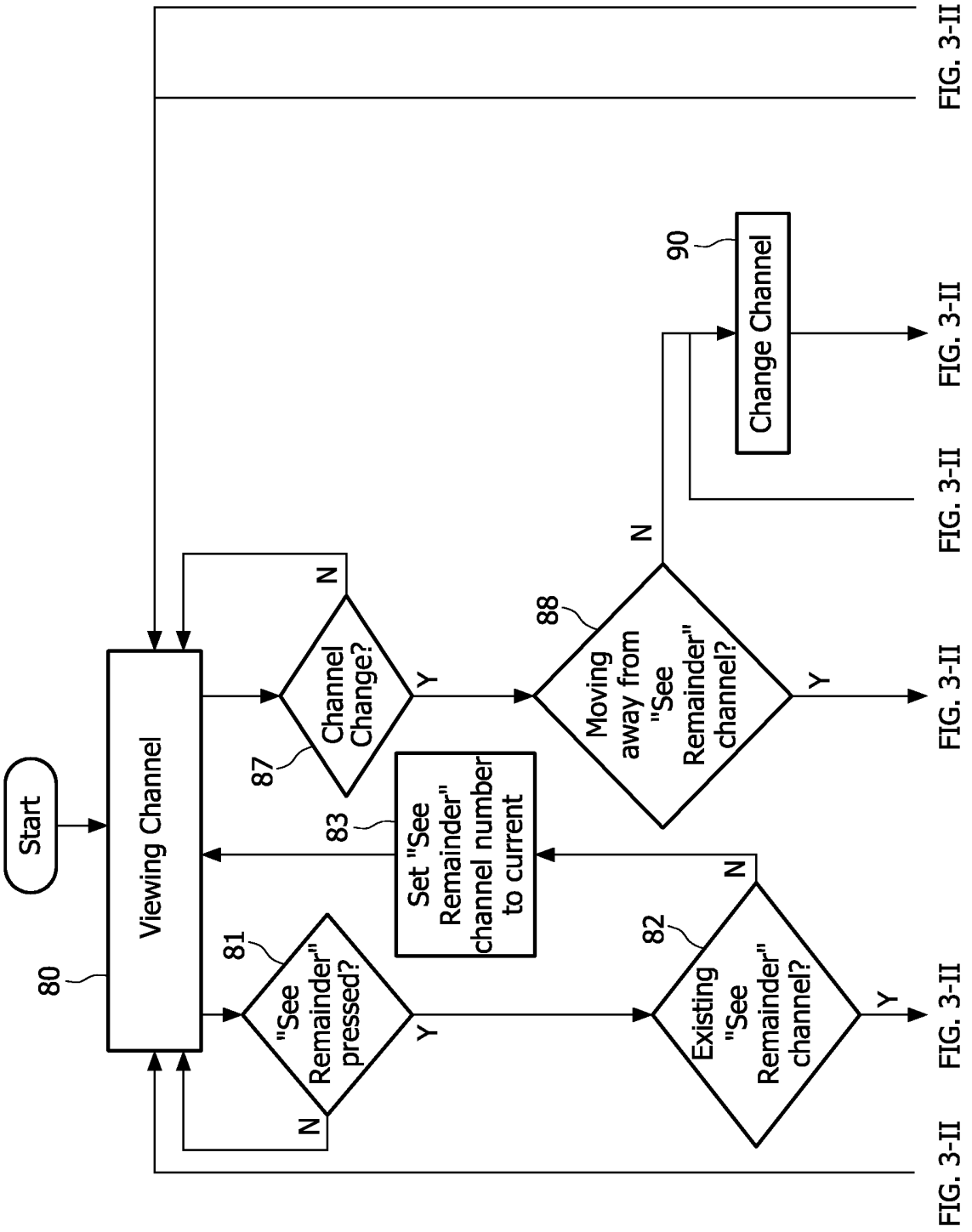
Start
Viewing Channel
80
"See Remainder" pressed?
81
N
Y
Channel Change?
87
N
Y
Existing "See Remainder" channel?
82
N
Y
Moving away from "See Remainder" channel?
88
N
Y
Set "See Remainder" channel number to current
83
Change Channel
90
FIG. 3-II
FIG. 3-II
FIG. 3-II
FIG. 3-II
FIG. 3-II
FIG. 3-II

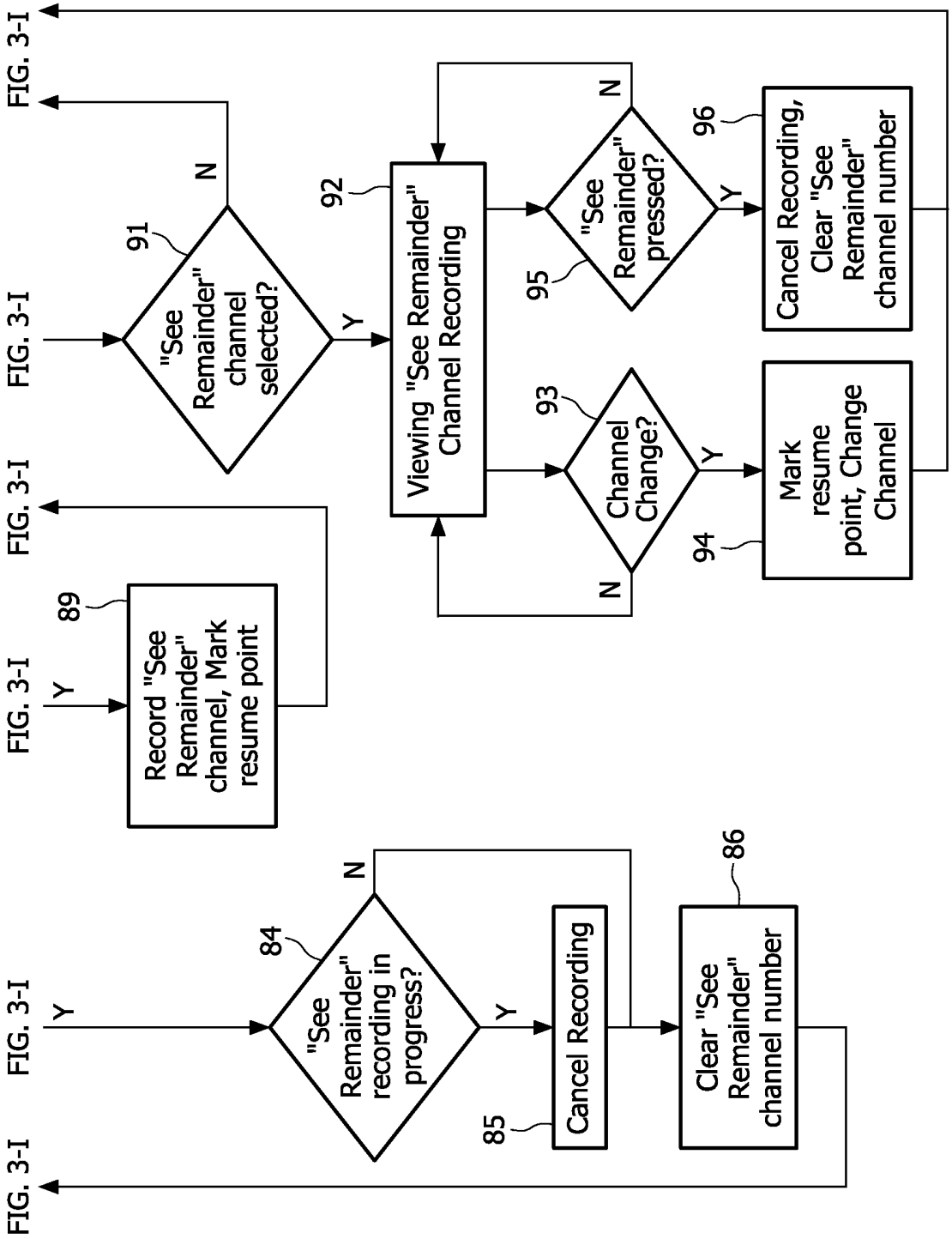
FIG. 3-I
FIG. 3-I
FIG. 3-I
FIG. 3-I
FIG. 3-I
FIG. 3-I
Y
"See Remainder" recording in progress?
84
N
Y
Cancel Recording
85
Clear "See Remainder" channel number
86
Y
Record "See Remainder" channel, Mark resume point
89
"See Remainder" channel selected?
91
N
Y
Viewing "See Remainder" Channel Recording
92
Channel Change?
93
N
Y
Mark resume point, Change Channel
94
"See Remainder" pressed?
95
N
Y
Cancel Recording, Clear "See Remainder" channel number
96

FIG. 3-II

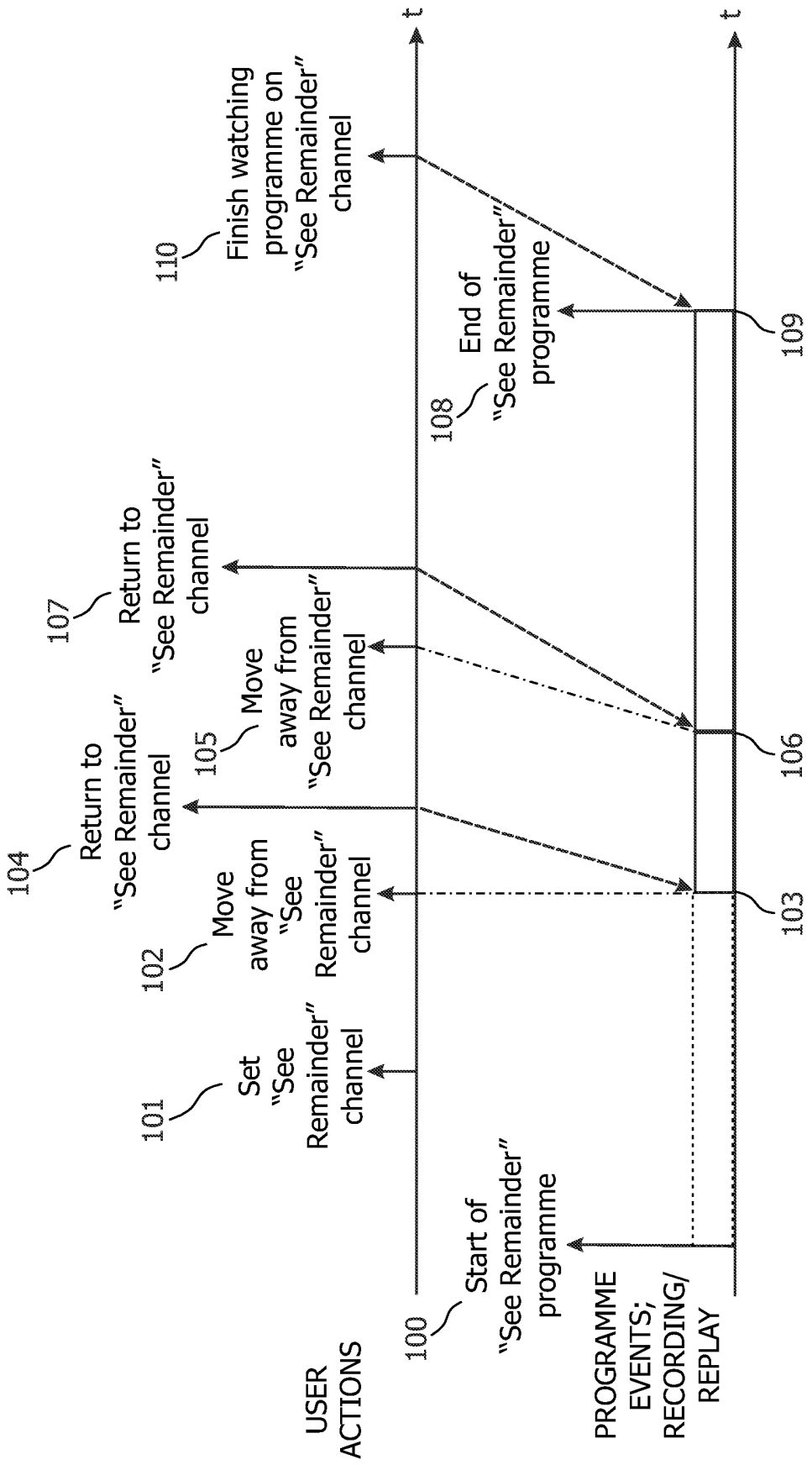
USER ACTIONS
PROGRAMME EVENTS; RECORDING/ REPLAY
t
t
100
Start of "See Remainder" programme
101
Set "See Remainder" channel
102
Move away from "See Remainder" channel
103
104
Return to "See Remainder" channel
105
Move away from "See Remainder" channel
106
107
Return to "See Remainder" channel
108
End of "See Remainder" programme
109
110
Finish watching programme on "See Remainder" channel

FIG. 4

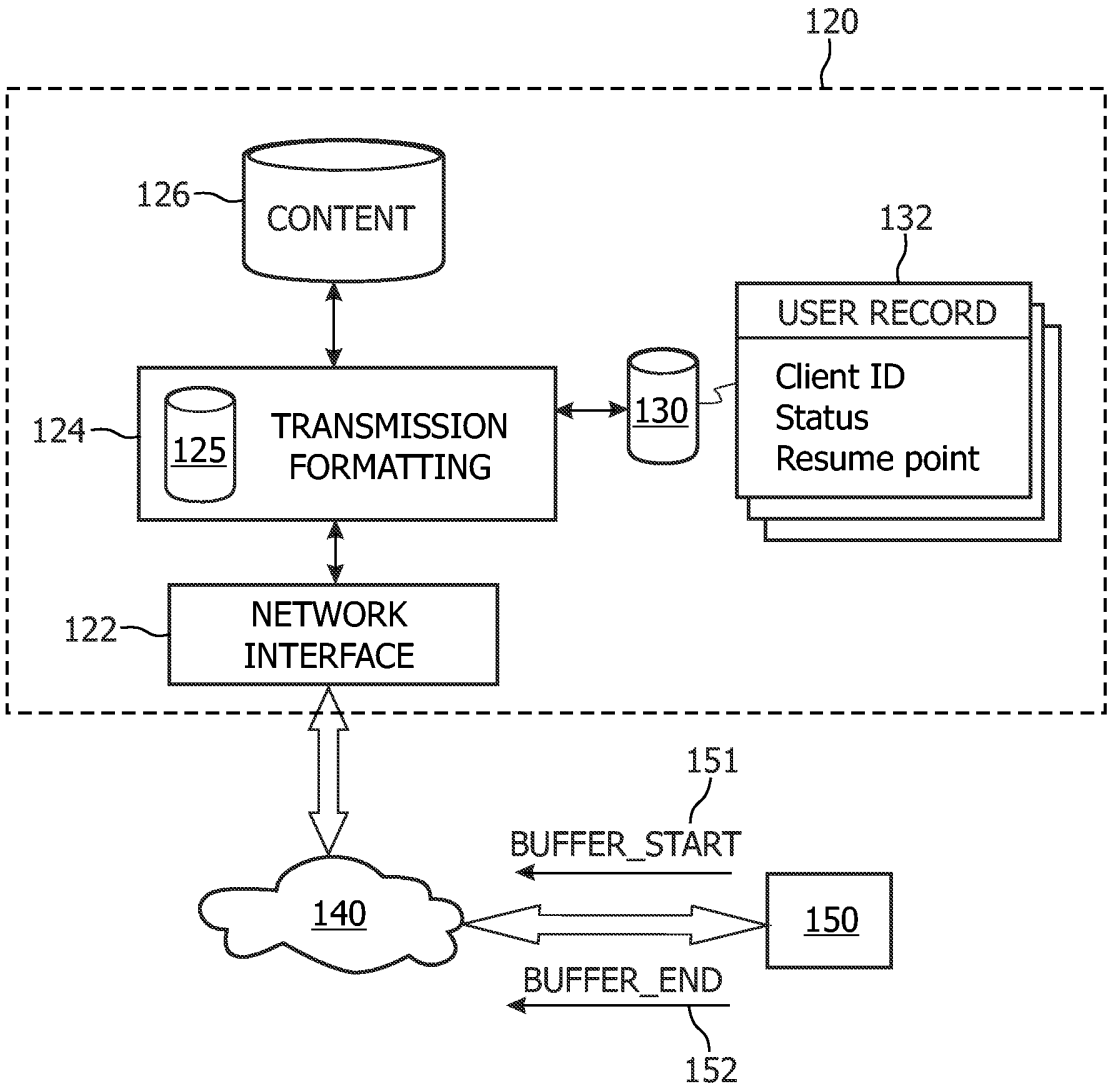
120
126
CONTENT
132
USER RECORD
Client ID
Status
Resume point
124
125
TRANSMISSION
FORMATTING
130
122
NETWORK
INTERFACE
151
BUFFER_START
140
150
BUFFER_END
152

FIG. 5