US 20210399787A1

(19) **United States**

(12) **Patent Application Publication** (10) **Pub. No.: US 2021/0399787 A1**

ZHOU et al. (43) **Pub. Date: Dec. 23, 2021**

(54) **DEFAULT BEAM SELECTION BASED ON A SUBSET OF CORESETS**

(71) Applicant: **QUALCOMM Incorporated**, San Diego, CA (US)

(72) Inventors: **Yan ZHOU**, San Diego, CA (US); **Tao LUO**, San Diego, CA (US); **Wooseok NAM**, San Diego, CA (US); **Makesh Pravin JOHN WILSON**, San Diego, CA (US); **Srinivas YERRAMALLI**, San Diego, CA (US); **Xiaoxia ZHANG**, San Diego, CA (US); **Jing SUN**, San Diego, CA (US); **Arumugam CHENDAMARAI KANNAN**, San Diego, CA (US)

(21) Appl. No.: **17/466,227**

(22) Filed: **Sep. 3, 2021**

Related U.S. Application Data

(63) Continuation of application No. 16/662,766, filed on Oct. 24, 2019, now Pat. No. 11,115,110.

(60) Provisional application No. 62/780,175, filed on Dec. 14, 2018.

Publication Classification

(51) **Int. Cl.**

H04B 7/08	(2006.01)
H04W 74/08	(2006.01)
H04W 72/04	(2006.01)
H04L 5/00	(2006.01)
H04W 72/12	(2006.01)

(52) **U.S. Cl.**

CPC ***H04B 7/088*** (2013.01); ***H04W 74/0816*** (2013.01); ***H04W 72/1205*** (2013.01); ***H04L 5/005*** (2013.01); ***H04W 72/046*** (2013.01)

(57) **ABSTRACT**

In order to overcome problems that a UE may face in determining a default beam for communication with the base station during a COT, a method, apparatus, and computer-readable medium are provided for a base station to indicate to the UE which CORESET(s), QCL assumptions, UL resources, and/or spatial relationships are selected for a COT. A UE receives, from a base station, an indication corresponding to a COT. The indication is for at least one of a set of CORESETs, a set of QCL assumptions, a set of UL resources, or a set of spatial relations for determining a default beam. The UE determines the default beam from the base station for use during the COT based on the indication. The UE transmits or receives a transmission using the default beam.

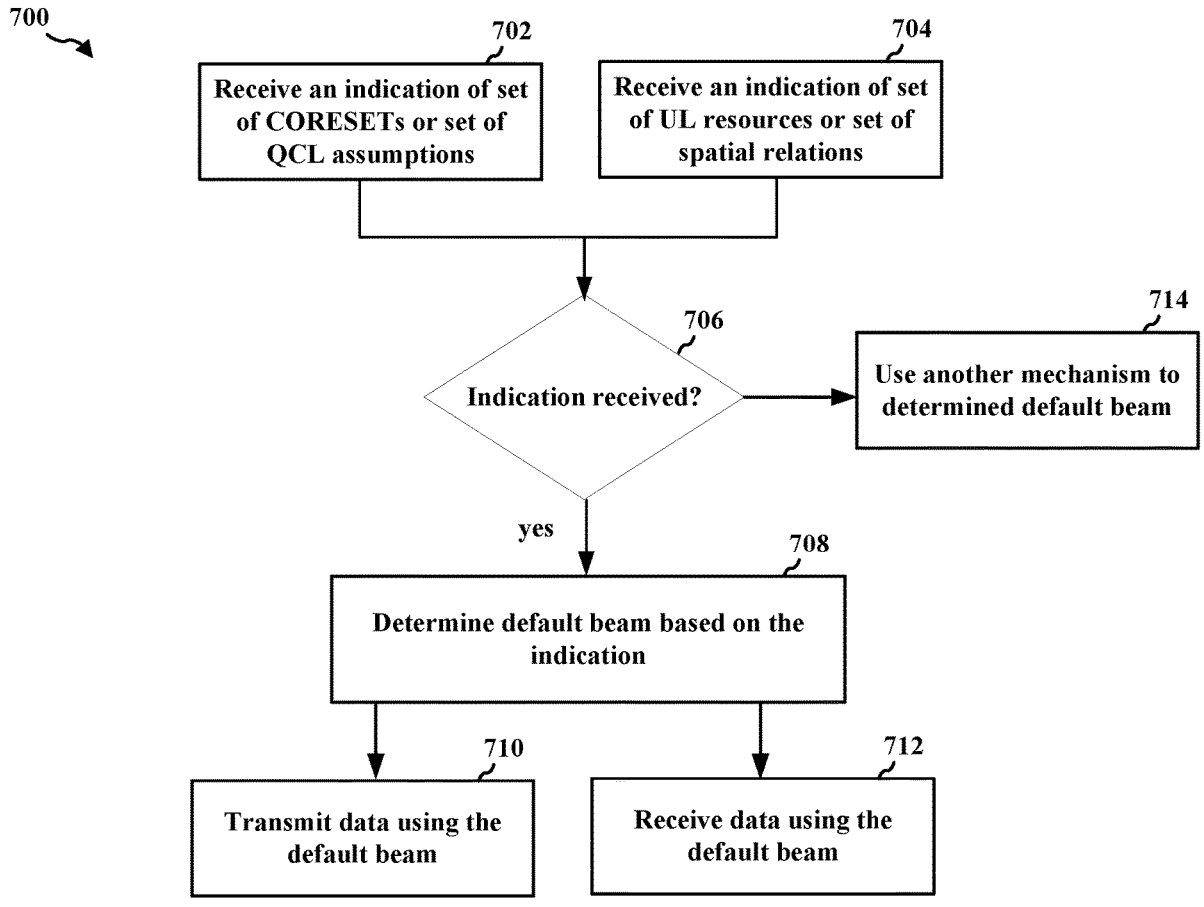

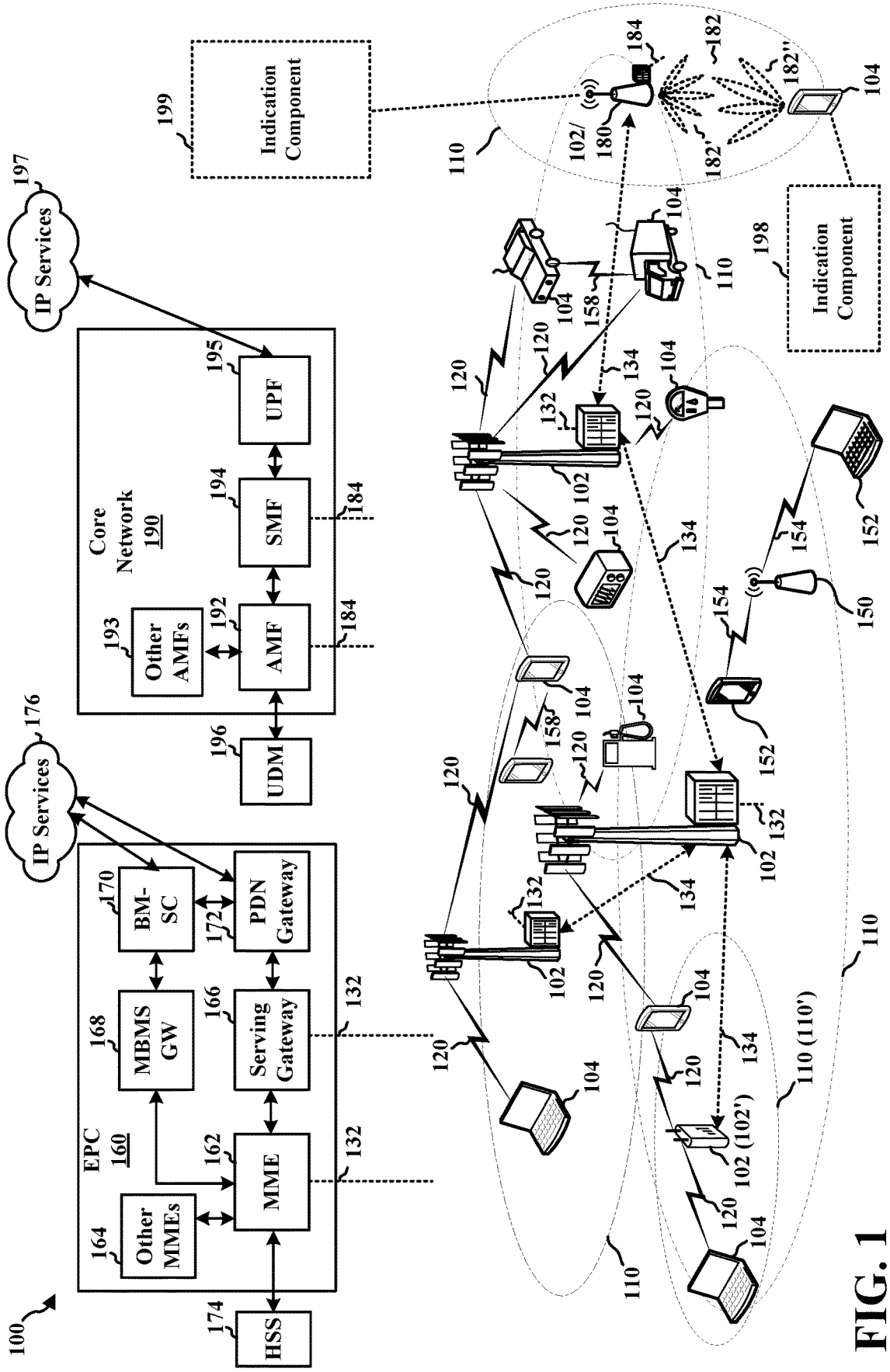
100
EPC
160
Other MMEs
164
MME
162
MBMS GW
168
Serving Gateway
166
BM-SC
170
PDN Gateway
172
HSS
174
IP Services
176
Core Network
190
Other AMFs
193
AMF
192
SMF
194
UPF
195
UDM
196
IP Services
197
Indication Component
199
Indication Component
198
102/180
102 (102')
102
104
110
110 (110')
120
132
134
150
152
154
158
182
182'
182''
184

FIG. 1

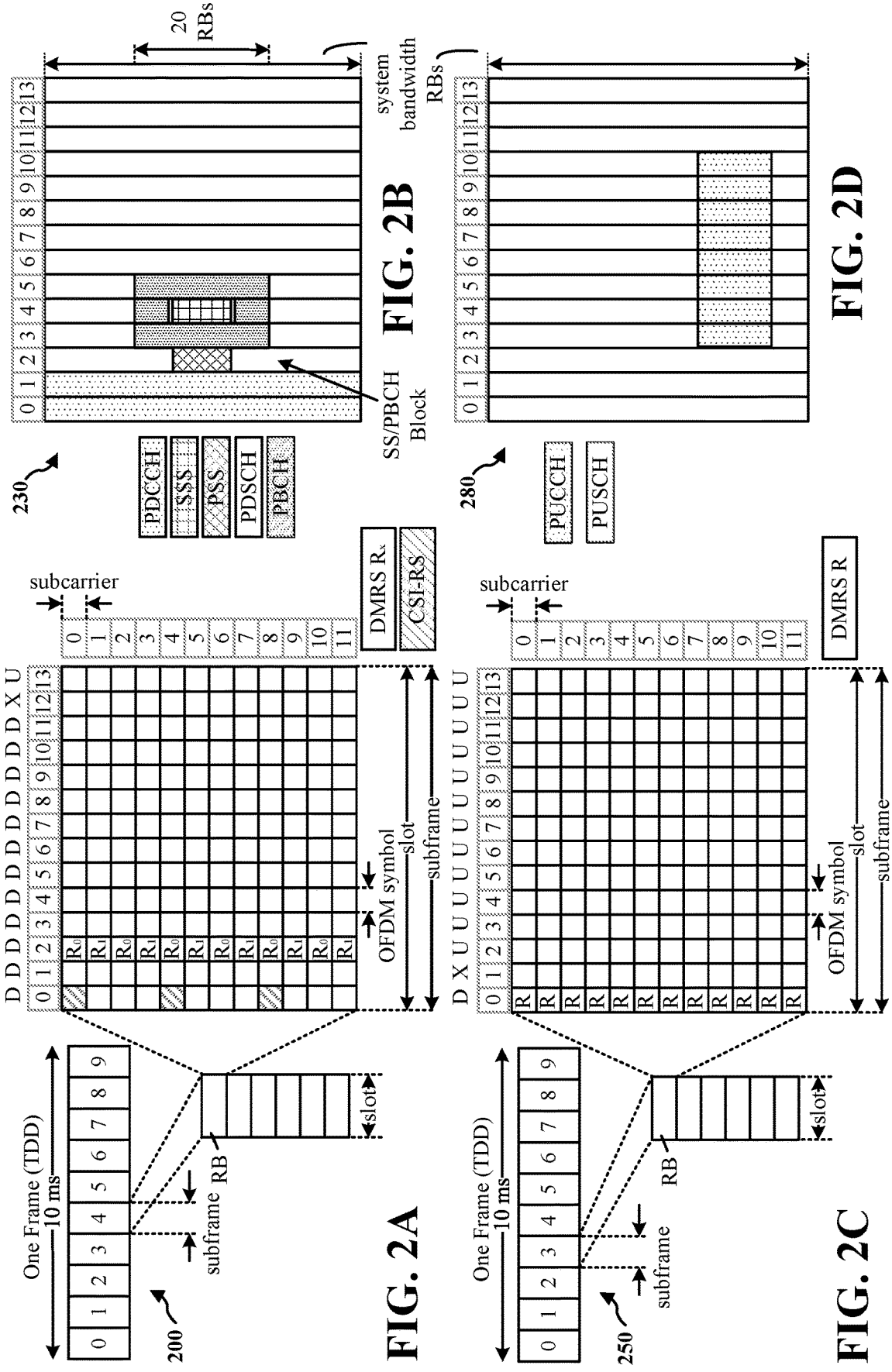
One Frame (TDD)
10 ms
subframe
RB
slot
200
D D D D D D D D D D D X U
subcarrier
OFDM symbol
slot
subframe
DMRS R0
DMRS R1
CSI-RS
230
PDCCH
SSS
PSS
PDSCH
PBCH
SS/PBCH Block
20 RBs
system bandwidth RBs
FIG. 2A
FIG. 2B
D X U U U U U U U U U U U U
DMRS R
280
PUCCH
PUSCH
250
FIG. 2C
FIG. 2D

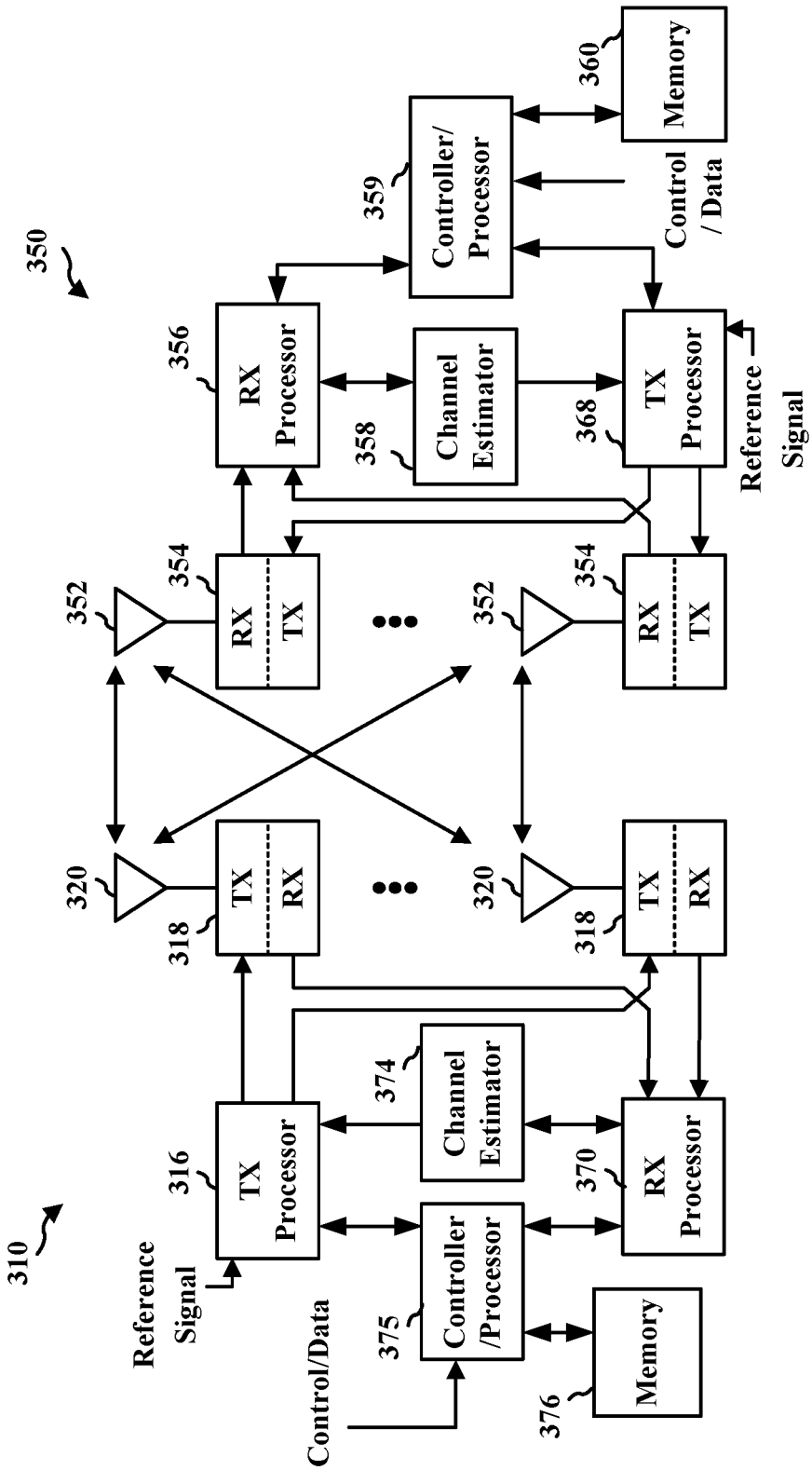
310
350
Reference Signal
Control/Data
TX Processor
316
Channel Estimator
374
Controller /Processor
375
Memory
376
RX Processor
370
TX
RX
318
320
352
354
RX Processor
356
Channel Estimator
358
Controller/ Processor
359
Memory
360
TX Processor
368
Control / Data
Reference Signal

FIG. 3

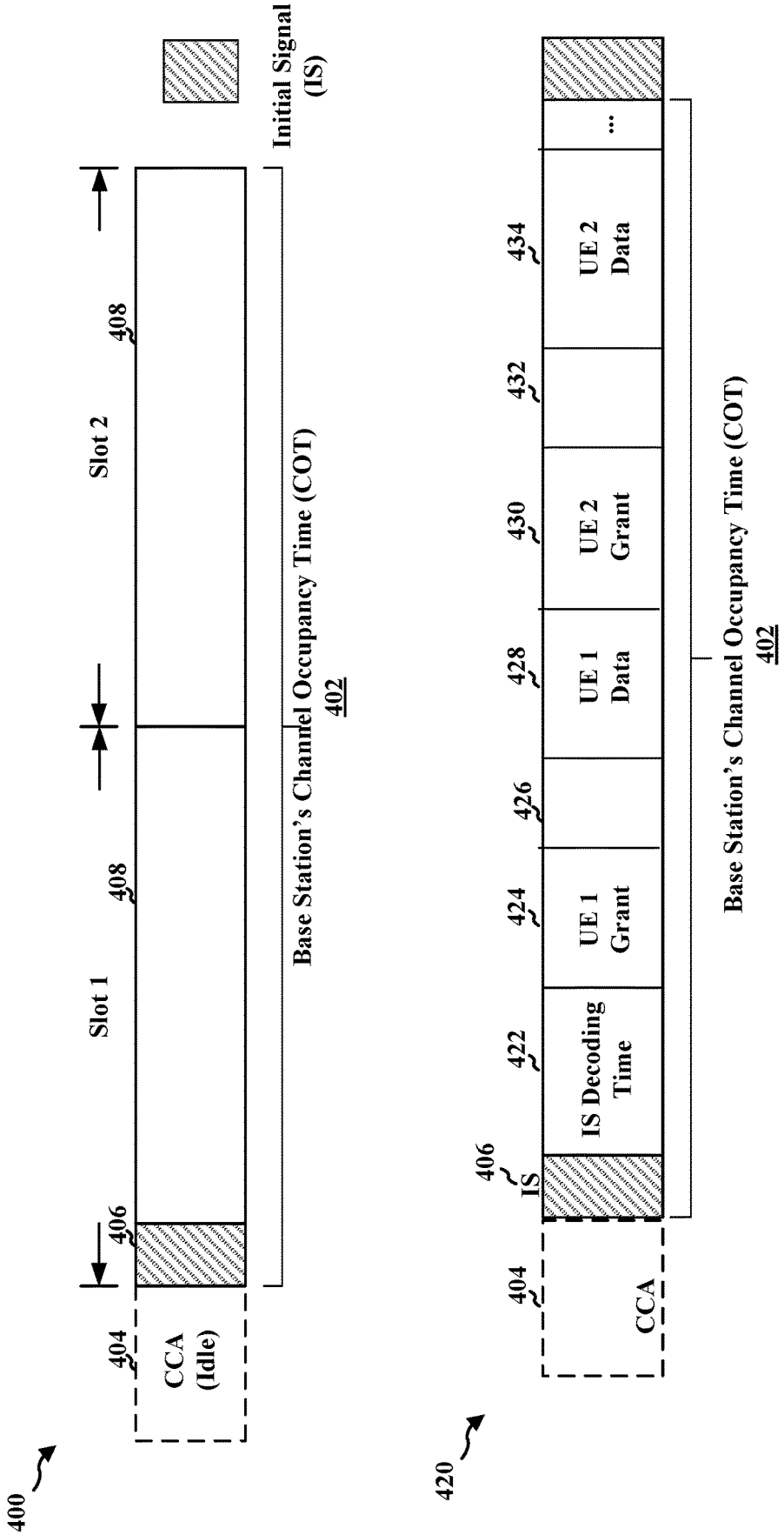
400
CCA (Idle)
404
406
Slot 1
408
Slot 2
408
Initial Signal (IS)
Base Station's Channel Occupancy Time (COT)
402
420
CCA
404
406
IS
IS Decoding Time
422
UE 1 Grant
424
426
UE 1 Data
428
UE 2 Grant
430
432
UE 2 Data
434
...
Base Station's Channel Occupancy Time (COT)
402

FIG. 4

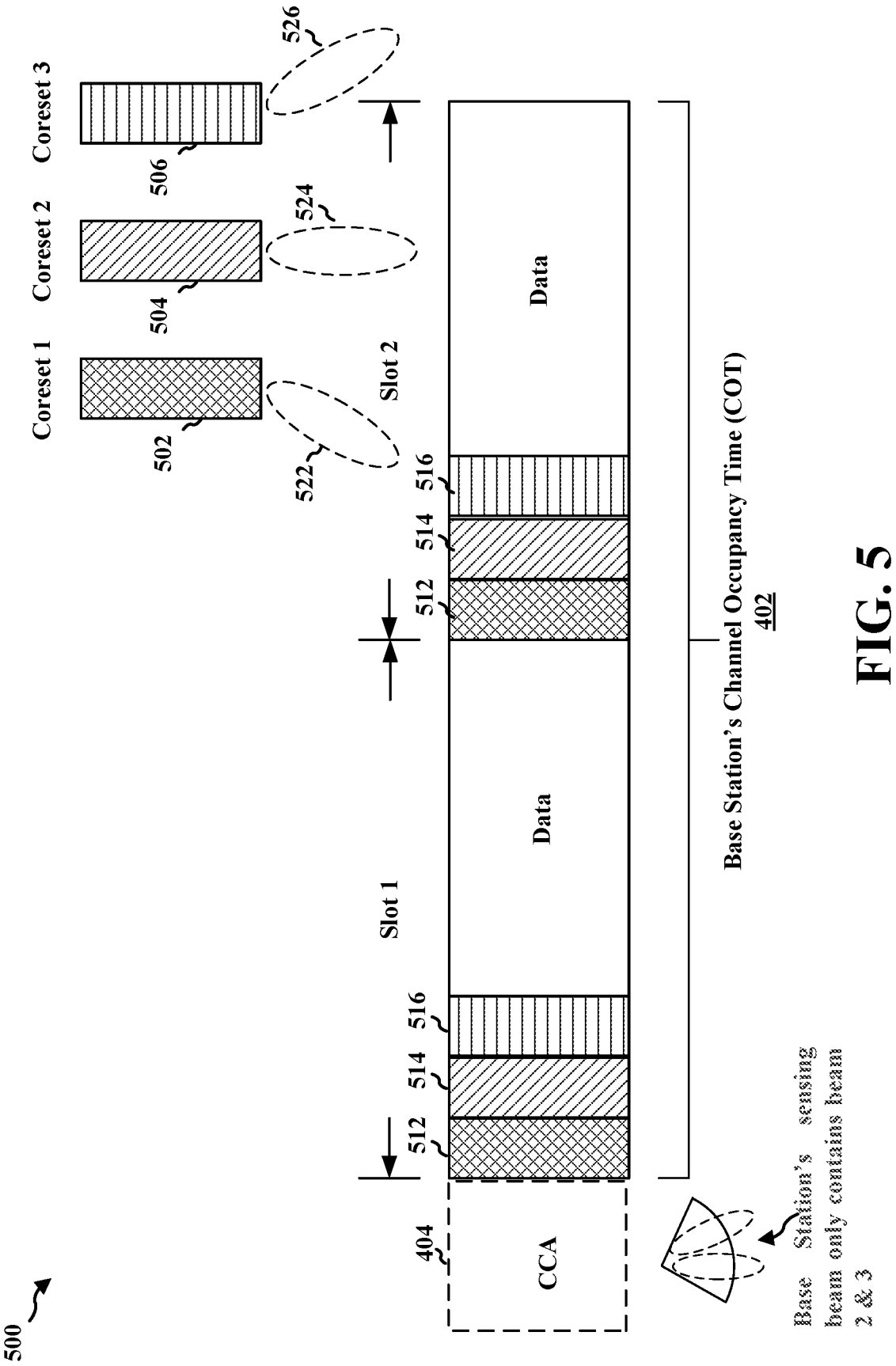
500
Coreset 1
Coreset 2
Coreset 3
502
504
506
522
524
526
Slot 1
Slot 2
Data
Data
512
514
516
512
514
516
Base Station's Channel Occupancy Time (COT)
402
404
CCA
Base Station's sensing beam only contains beam 2 & 3

FIG. 5

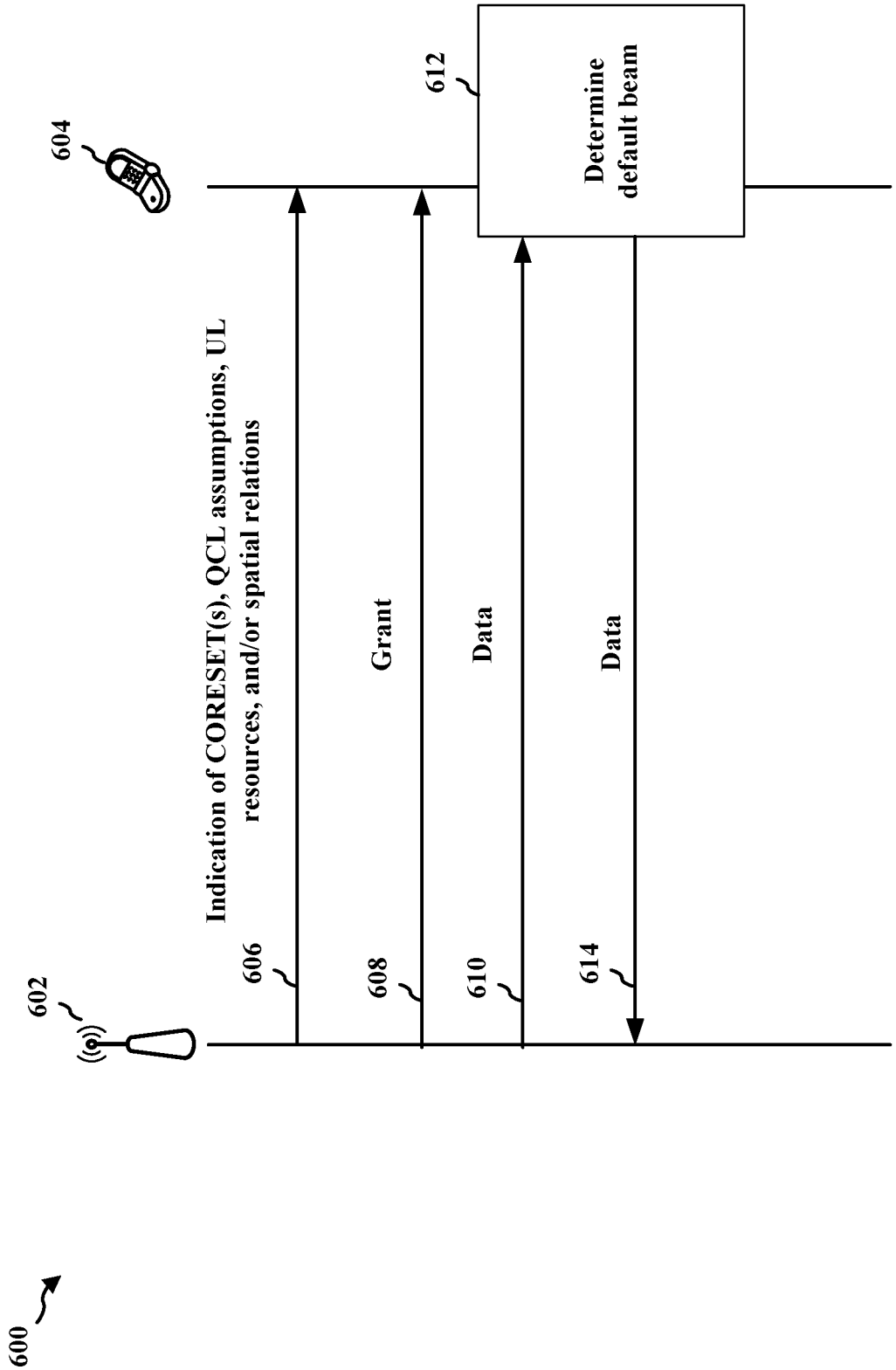
600
602
604
606
608
610
612
614
Indication of CORESET(s), QCL assumptions, UL resources, and/or spatial relations
Grant
Data
Data
Determine default beam

FIG. 6

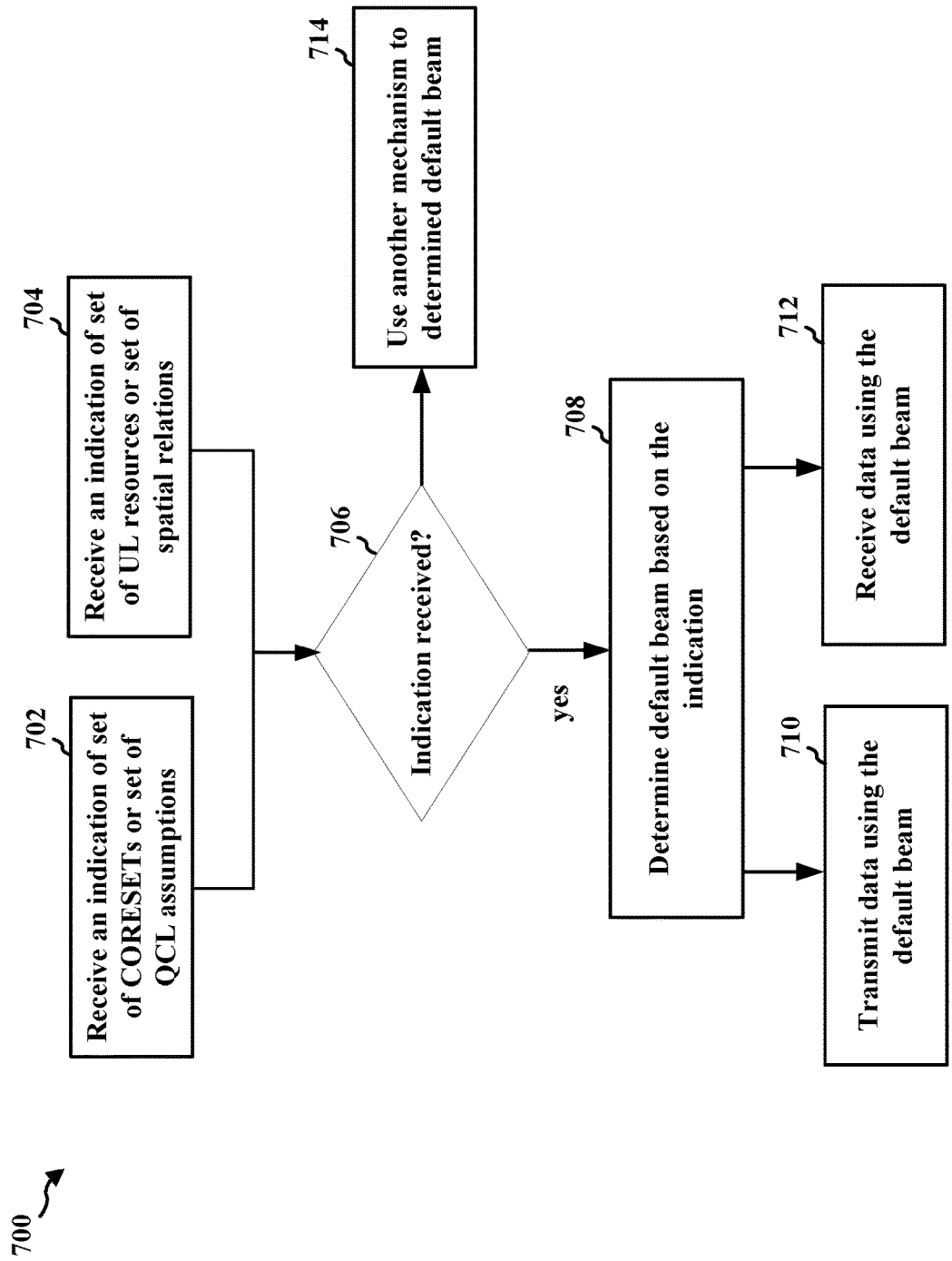
700
702
Receive an indication of set of CORESETs or set of QCL assumptions
704
Receive an indication of set of UL resources or set of spatial relations
706
Indication received?
yes
708
Determine default beam based on the indication
710
Transmit data using the default beam
712
Receive data using the default beam
714
Use another mechanism to determined default beam

FIG. 7

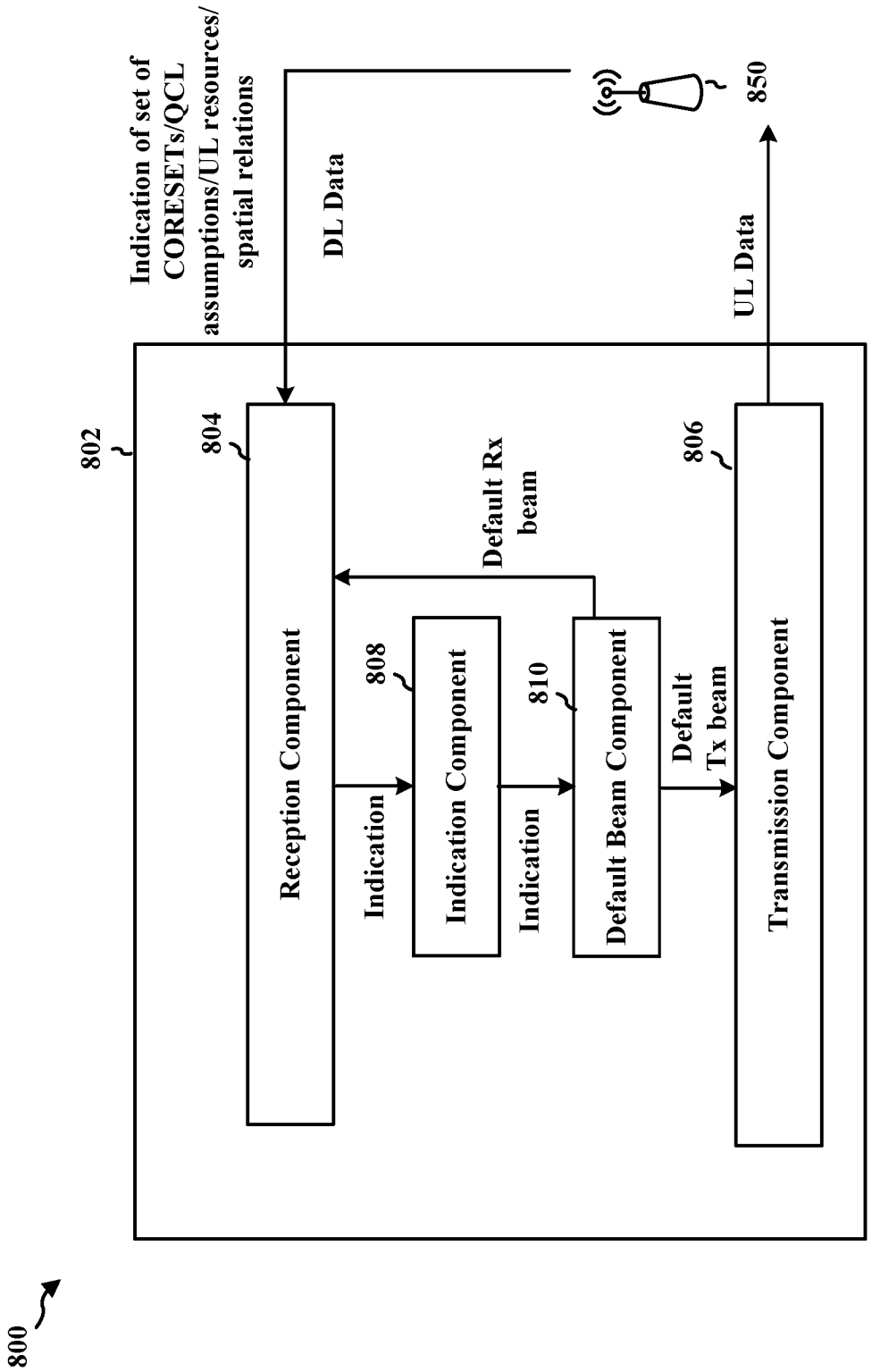
800
802
804
Reception Component
Indication of set of CORESETs/QCL assumptions/UL resources/ spatial relations
DL Data
Default Rx beam
808
Indication Component
Indication
810
Default Beam Component
Indication
806
Default Tx beam
Transmission Component
UL Data
850

FIG. 8

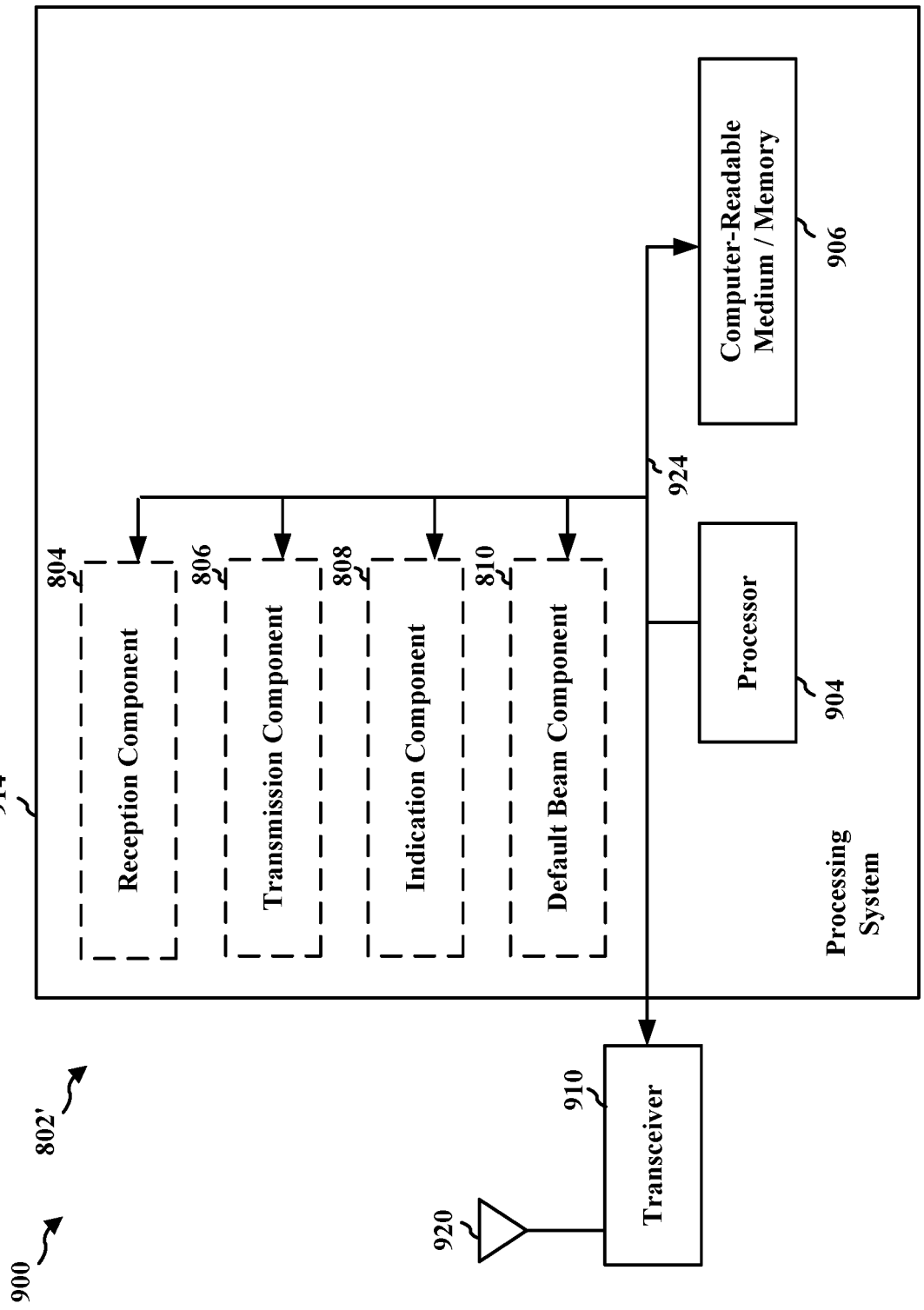
900
802'
914
Processing System
Reception Component
804
Transmission Component
806
Indication Component
808
Default Beam Component
810
Processor
904
Computer-Readable Medium / Memory
906
924
Transceiver
910
920

FIG. 9

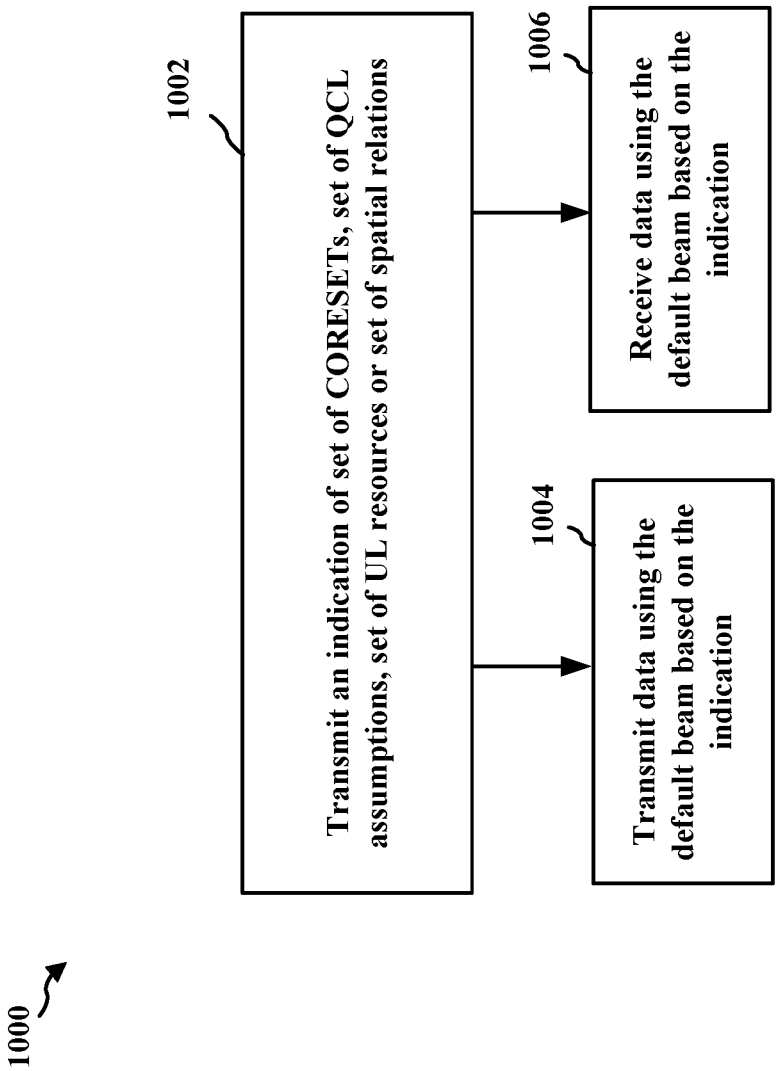
1000
1002
Transmit an indication of set of CORESETs, set of QCL assumptions, set of UL resources or set of spatial relations
1004
Transmit data using the default beam based on the indication
1006
Receive data using the default beam based on the indication

FIG. 10

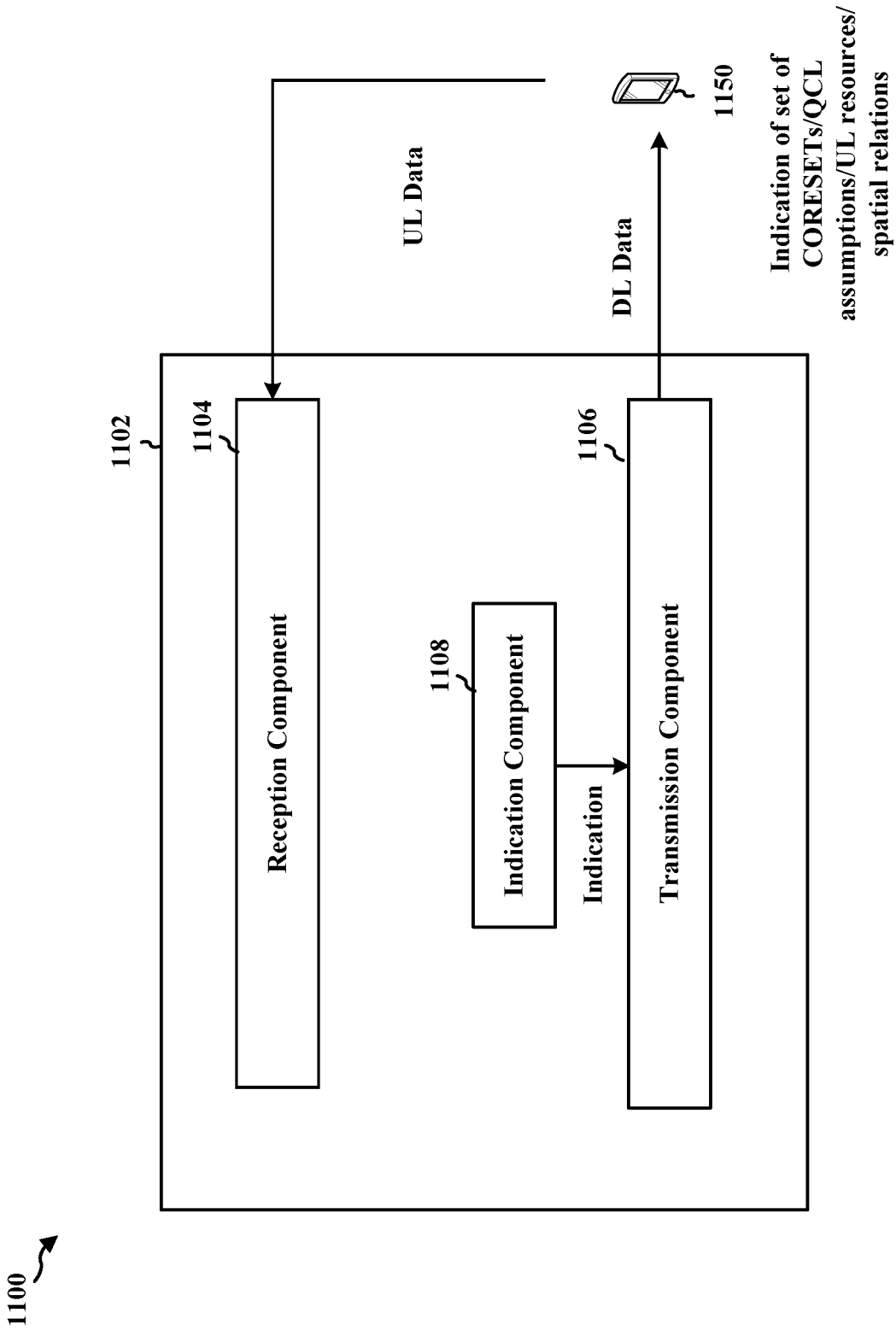
1100
1102
1104
Reception Component
1106
Transmission Component
1108
Indication Component
Indication
UL Data
DL Data
1150
Indication of set of CORESETs/QCL assumptions/UL resources/ spatial relations

FIG. 11

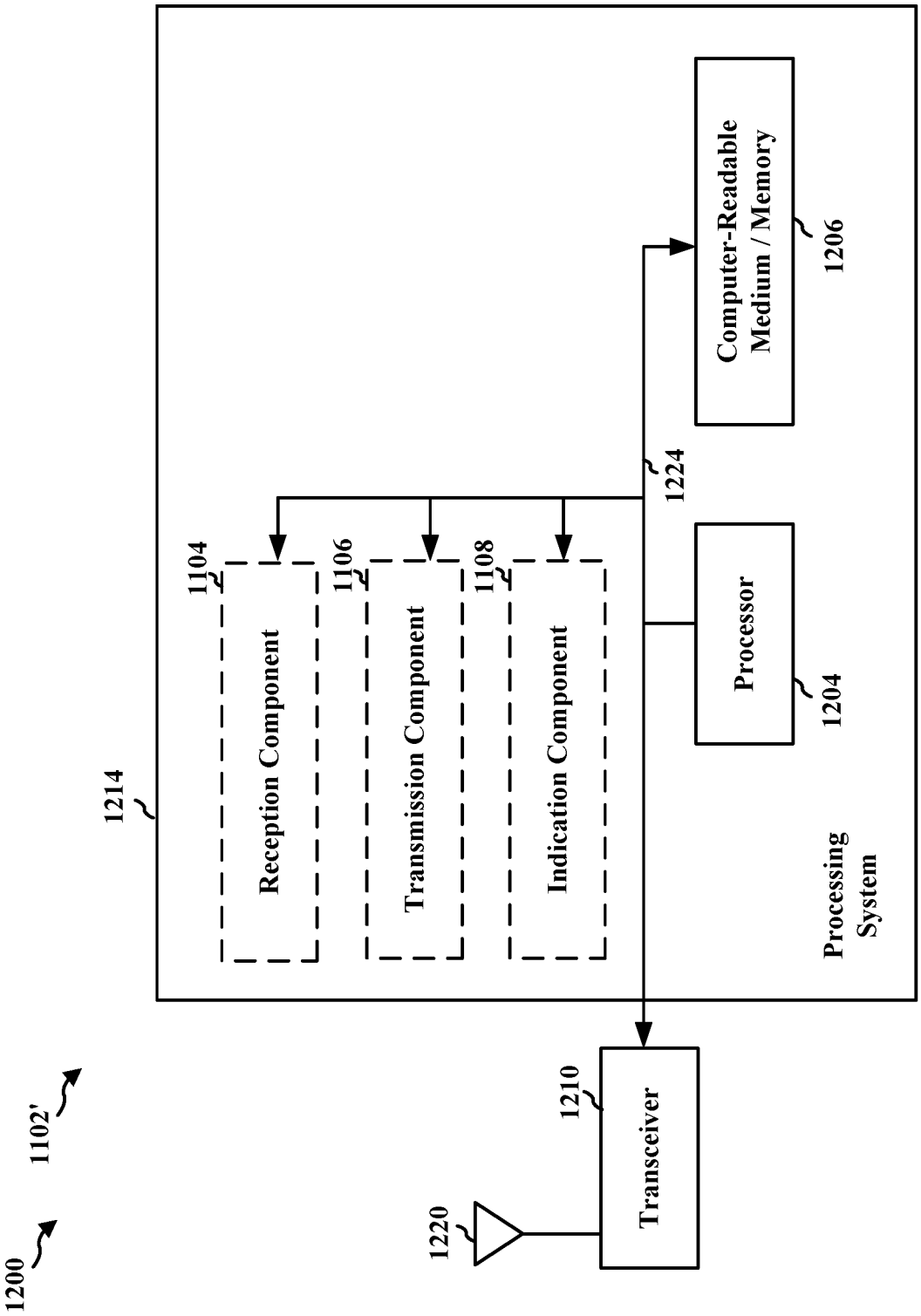
1200
1102'
1214
Reception Component
1104
Transmission Component
1106
Indication Component
1108
Processor
1204
Computer-Readable Medium / Memory
1206
1224
Processing System
Transceiver
1210
1220

FIG. 12

DEFAULT BEAM SELECTION BASED ON A SUBSET OF CORESETS

CROSS-REFERENCE TO RELATED APPLICATION(S)

[0001] This application is a Continuation of U.S. patent application Ser. No. 16/662,766, entitled "DEFAULT BEAM SELECTION BASED ON A SUBSET OF CORESET" and filed on Oct. 24, 2019, which claims the benefit of U.S. Provisional Application Ser. No. 62/780,175, entitled "DEFAULT BEAM SELECTION BASED ON A SUBSET OF CORESETS" and filed on Dec. 14, 2018, which are expressly incorporated by reference herein in their entirety.

BACKGROUND

Technical Field

[0002] The present disclosure relates generally to communication systems, and more particularly, to wireless communication during a Channel Occupancy Time (COT).

Introduction

[0003] Wireless communication systems are widely deployed to provide various telecommunication services such as telephony, video, data, messaging, and broadcasts. Typical wireless communication systems may employ multiple-access technologies capable of supporting communication with multiple users by sharing available system resources. Examples of such multiple-access technologies include code division multiple access (CDMA) systems, time division multiple access (TDMA) systems, frequency division multiple access (FDMA) systems, orthogonal frequency division multiple access (OFDMA) systems, single-carrier frequency division multiple access (SC-FDMA) systems, and time division synchronous code division multiple access (TD-SCDMA) systems.

[0004] These multiple access technologies have been adopted in various telecommunication standards to provide a common protocol that enables different wireless devices to communicate on a municipal, national, regional, and even global level. An example telecommunication standard is 5G New Radio (NR). 5G NR is part of a continuous mobile broadband evolution promulgated by Third Generation Partnership Project (3GPP) to meet new requirements associated with latency, reliability, security, scalability (e.g., with Internet of Things (IoT)), and other requirements. 5G NR includes services associated with enhanced mobile broadband (eMBB), massive machine type communications (mMTC), and ultra reliable low latency communications (URLLC). Some aspects of 5G NR may be based on the 4G Long Term Evolution (LTE) standard. There exists a need for further improvements in 5G NR technology. These improvements may also be applicable to other multi-access technologies and the telecommunication standards that employ these technologies.

SUMMARY

[0005] The following presents a simplified summary of one or more aspects in order to provide a basic understanding of such aspects. This summary is not an extensive overview of all contemplated aspects, and is intended to neither identify key or critical elements of all aspects nor delineate the scope of any or all aspects. Its sole purpose is to present some concepts of one or more aspects in a simplified form as a prelude to the more detailed description that is presented later.

[0006] In licensed communication bands, a default UE reception (Rx) beam may be quasi co-located (QCL) with a lowest Control Resource Set Identifier (CORESET ID) in the latest monitored slot. However, communication in unlicensed frequency bands may be limited to a COT based on performance of a Clear Channel Assessment (CCA). The shared nature of the medium may lead to use of only a subset of CORESETs or CORESET QCL assumptions in a given COT. For example, a base station might only perform or succeed in performing a CCA on certain beams. Thus, the base station might not use CORESET resources associated with other beams in the COT. This may lead to problems for the UE in determining default beams for communication with the base station during the COT.

[0007] Aspects presented herein improve communication between the base station and the UE through the base station indicating to the UE which CORESET(s) or QCL assumptions are selected for a COT. The UE may use the indication to determine a default beam for the communication. Similarly, the base station may indicate selected uplink (UL) resources or spatial relationships for the COT that the UE may use to determine a default beam.

[0008] In an aspect of the disclosure, a method, a computer-readable medium, and an apparatus are provided. The apparatus determines whether an indication corresponding to a COT is received from a base station, wherein the indication is for at least one of a set of CORESETs, a set of QCL assumptions, a set of UL resources, or a set of spatial relations for determining a default beam. The apparatus determines the default beam from the base station for use during the COT based on the indication if the indication is received from the base station. The apparatus then transmits or receives a transmission using the default beam.

[0009] In another aspect of the disclosure, a method, a computer-readable medium, and an apparatus are provided. The apparatus indicates, to a UE at least one of a set of CORESETs, a set of QCL assumptions, a set of UL resources, or a set of spatial relations for determining a default beam, the indication being for use in determining a default beam for use in a COT. The apparatus then transmits or receives communication with the UE based on the default beam.

[0010] To the accomplishment of the foregoing and related ends, the one or more aspects comprise the features hereinafter fully described and particularly pointed out in the claims. The following description and the annexed drawings set forth in detail certain illustrative features of the one or more aspects. These features are indicative, however, of but a few of the various ways in which the principles of various aspects may be employed, and this description is intended to include all such aspects and their equivalents.

BRIEF DESCRIPTION OF THE DRAWINGS

[0011] FIG. **1** is a diagram illustrating an example of a wireless communications system and an access network.

[0012] FIGS. **2**A, **2**B, **2**C, and **2**D are diagrams illustrating examples of a first 5G/NR frame, DL channels within a 5G/NR subframe, a second 5G/NR frame, and UL channels within a 5G/NR subframe, respectively.

[0013] FIG. **3** is a diagram illustrating an example of a base station and user equipment (UE) in an access network.

[0014] FIG. **4** illustrates an example COT.
[0015] FIG. **5** illustrates an example of CORESETs within a COT.
[0016] FIG. **6** illustrates an example communication flow between a base station and a UE.
[0017] FIG. **7** is a flowchart of a method of wireless communication.
[0018] FIG. **8** is a conceptual data flow diagram illustrating the data flow between different means/components in an exemplary apparatus.
[0019] FIG. **9** is a diagram illustrating an example of a hardware implementation for an apparatus employing a processing system.
[0020] FIG. **10** is a flowchart of a method of wireless communication.
[0021] FIG. **11** is a conceptual data flow diagram illustrating the data flow between different means/components in an exemplary apparatus.
[0022] FIG. **12** is a diagram illustrating an example of a hardware implementation for an apparatus employing a processing system.

DETAILED DESCRIPTION

[0023] The detailed description set forth below in connection with the appended drawings is intended as a description of various configurations and is not intended to represent the only configurations in which the concepts described herein may be practiced. The detailed description includes specific details for the purpose of providing a thorough understanding of various concepts. However, it will be apparent to those skilled in the art that these concepts may be practiced without these specific details. In some instances, well known structures and components are shown in block diagram form in order to avoid obscuring such concepts.
[0024] Several aspects of telecommunication systems will now be presented with reference to various apparatus and methods. These apparatus and methods will be described in the following detailed description and illustrated in the accompanying drawings by various blocks, components, circuits, processes, algorithms, etc. (collectively referred to as "elements"). These elements may be implemented using electronic hardware, computer software, or any combination thereof. Whether such elements are implemented as hardware or software depends upon the particular application and design constraints imposed on the overall system.
[0025] By way of example, an element, or any portion of an element, or any combination of elements may be implemented as a "processing system" that includes one or more processors. Examples of processors include microprocessors, microcontrollers, graphics processing units (GPUs), central processing units (CPUs), application processors, digital signal processors (DSPs), reduced instruction set computing (RISC) processors, systems on a chip (SoC), baseband processors, field programmable gate arrays (FPGAs), programmable logic devices (PLDs), state machines, gated logic, discrete hardware circuits, and other suitable hardware configured to perform the various functionality described throughout this disclosure. One or more processors in the processing system may execute software. Software shall be construed broadly to mean instructions, instruction sets, code, code segments, program code, programs, subprograms, software components, applications, software applications, software packages, routines, subroutines, objects, executables, threads of execution, procedures, functions, etc., whether referred to as software, firmware, middleware, microcode, hardware description language, or otherwise.
[0026] Accordingly, in one or more example embodiments, the functions described may be implemented in hardware, software, or any combination thereof. If implemented in software, the functions may be stored on or encoded as one or more instructions or code on a computer-readable medium. Computer-readable media includes computer storage media. Storage media may be any available media that can be accessed by a computer. By way of example, and not limitation, such computer-readable media can comprise a random-access memory (RAM), a read-only memory (ROM), an electrically erasable programmable ROM (EEPROM), optical disk storage, magnetic disk storage, other magnetic storage devices, combinations of the aforementioned types of computer-readable media, or any other medium that can be used to store computer executable code in the form of instructions or data structures that can be accessed by a computer.
[0027] FIG. **1** is a diagram illustrating an example of a wireless communications system and an access network **100**. The wireless communications system (also referred to as a wireless wide area network (WWAN)) includes base stations **102**, UEs **104**, an Evolved Packet Core (EPC) **160**, and another core network **190** (such as a 5G Core (5GC)). The base stations **102** may include macro cells (high power cellular base station) and/or small cells (low power cellular base station). The macro cells include base stations. The small cells include femtocells, picocells, and microcells.
[0028] The base stations **102** configured for 4G LTE (collectively referred to as Evolved Universal Mobile Telecommunications System (UMTS) Terrestrial Radio Access Network (E-UTRAN)) may interface with the EPC **160** through backhaul links **132** (e.g., S1 interface). The base stations **102** configured for 5G NR (collectively referred to as Next Generation RAN (NG-RAN)) may interface with core network **190** through backhaul links **184**. In addition to other functions, the base stations **102** may perform one or more of the following functions: transfer of user data, radio channel ciphering and deciphering, integrity protection, header compression, mobility control functions (e.g., handover, dual connectivity), inter-cell interference coordination, connection setup and release, load balancing, distribution for non-access stratum (NAS) messages, NAS node selection, synchronization, radio access network (RAN) sharing, multimedia broadcast multicast service (MBMS), subscriber and equipment trace, RAN information management (RIM), paging, positioning, and delivery of warning messages. The base stations **102** may communicate directly or indirectly (e.g., through the EPC **160** or core network **190**) with each other over backhaul links **134** (e.g., X2 interface). The backhaul links **134** may be wired or wireless.
[0029] The base stations **102** may wirelessly communicate with the UEs **104**. Each of the base stations **102** may provide communication coverage for a respective geographic coverage area **110**. There may be overlapping geographic coverage areas **110**. For example, the small cell **102'** may have a coverage area **110'** that overlaps the coverage area **110** of one or more macro base stations **102**. A network that includes both small cell and macro cells may be known as a heterogeneous network. A heterogeneous network may also include Home Evolved Node Bs (eNBs) (HeNBs), which may provide service to a restricted group known as a

closed subscriber group (CSG). The communication links **120** between the base stations **102** and the UEs **104** may include UL (also referred to as reverse link) transmissions from a UE **104** to a base station **102** and/or downlink (DL) (also referred to as forward link) transmissions from a base station **102** to a UE **104**. The communication links **120** may use multiple-input and multiple-output (MIMO) antenna technology, including spatial multiplexing, beamforming, and/or transmit diversity. The communication links may be through one or more carriers. The base stations **102**/UEs **104** may use spectrum up to Y MHz (e.g., 5, 10, 15, 20, 100, 400, etc. MHz) bandwidth per carrier allocated in a carrier aggregation of up to a total of Yx MHz (x component carriers) used for transmission in each direction. The carriers may or may not be adjacent to each other. Allocation of carriers may be asymmetric with respect to DL and UL (e.g., more or less carriers may be allocated for DL than for UL). The component carriers may include a primary component carrier and one or more secondary component carriers. A primary component carrier may be referred to as a primary cell (PCell) and a secondary component carrier may be referred to as a secondary cell (SCell).

[0030] Certain UEs **104** may communicate with each other using device-to-device (D2D) communication link **158**. The D2D communication link **158** may use the DL/UL WWAN spectrum. The D2D communication link **158** may use one or more sidelink channels, such as a physical sidelink broadcast channel (PSBCH), a physical sidelink discovery channel (PSDCH), a physical sidelink shared channel (PSSCH), and a physical sidelink control channel (PSCCH). D2D communication may be through a variety of wireless D2D communications systems, such as for example, FlashLinQ, WiMedia, Bluetooth, ZigBee, Wi-Fi based on the IEEE 802.11 standard, LTE, or NR.

[0031] The wireless communications system may further include a Wi-Fi access point (AP) **150** in communication with Wi-Fi stations (STAs) **152** via communication links **154** in a 5 GHz unlicensed frequency spectrum. When communicating in an unlicensed frequency spectrum, the STAs **152**/AP **150** may perform a clear channel assessment (CCA) prior to communicating in order to determine whether the channel is available.

[0032] The small cell **102'** may operate in a licensed and/or an unlicensed frequency spectrum. When operating in an unlicensed frequency spectrum, the small cell **102'** may employ NR and use the same 5 GHz unlicensed frequency spectrum as used by the Wi-Fi AP **150**. The small cell **102'**, employing NR in an unlicensed frequency spectrum, may boost coverage to and/or increase capacity of the access network. A base station **102**, whether a small cell **102'** or a large cell (e.g., macro base station), may include an eNB, gNodeB (gNB), or other type of base station. Some base stations **180**, such as a gNB, may operate in a traditional sub 6 GHz spectrum, in millimeter wave (mmW) frequencies, and/or near mmW frequencies in communication with the UE **104**. When the gNB (e.g., base station **180**) operates in mmW or near mmW frequencies, the **180** may be referred to as an mmW base station. Extremely high frequency (EHF) is part of the radio frequency (RF) in the electromagnetic spectrum. EHF has a range of 30 GHz to 300 GHz and a wavelength between 1 millimeter and 10 millimeters. Radio waves in the band may be referred to as a millimeter wave. Near mmW may extend down to a frequency of 3 GHz with a wavelength of 100 millimeters. The super high frequency (SHF) band extends between 3 GHz and 30 GHz, also referred to as centimeter wave. Communications using the mmW/near mmW radio frequency band has extremely high path loss and a short range. The mmW base station (e.g., base station **180**) may utilize beamforming **182** with the UE **104** to compensate for the extremely high path loss and short range.

[0033] The base station **180** may transmit a beamformed signal to the UE **104** in one or more transmit directions **182'**. The UE **104** may receive the beamformed signal from the base station **180** in one or more receive directions **182"**. The UE **104** may also transmit a beamformed signal to the base station **180** in one or more transmit directions. The base station **180** may receive the beamformed signal from the UE **104** in one or more receive directions. The base station **180**/UE **104** may perform beam training to determine the best receive and transmit directions for each of the base station **180**/UE **104**. The transmit and receive directions for the base station **180** may or may not be the same. The transmit and receive directions for the UE **104** may or may not be the same.

[0034] The EPC **160** may include a Mobility Management Entity (MME) **162**, other MMES **164**, a Serving Gateway **166**, a Multimedia Broadcast Multicast Service (MBMS) Gateway **168**, a Broadcast Multicast Service Center (BM-SC) **170**, and a Packet Data Network (PDN) Gateway **172**. The MME **162** may be in communication with a Home Subscriber Server (HSS) **174**. The MME **162** is the control node that processes the signaling between the UEs **104** and the EPC **160**. Generally, the MME **162** provide s bearer and connection management. All user Internet protocol (IP) packets are transferred through the Serving Gateway **166**, which itself is connected to the PDN Gateway **172**. The PDN Gateway **172** provides UE IP address allocation as well as other functions. The PDN Gateway **172** and the BM-SC **170** are connected to the IP Services **176**. The IP Services **176** may include the Internet, an intranet, an IP Multimedia Subsystem (IMS), a streaming service, and/or other IP services. The BM-SC **170** may provide functions for MBMS user service provisioning and delivery. The BM-SC **170** may serve as an entry point for content provider MBMS transmission, may be used to authorize and initiate MBMS Bearer Services within a public land mobile network (PLMN), and may be used to schedule MBMS transmissions. The MBMS Gateway **168** may be used to distribute MBMS traffic to the base stations **102** belonging to a Multicast Broadcast Single Frequency Network (MBSFN) area broadcasting a particular service, and may be responsible for session management (start/stop) and for collecting eMBMS related charging information.

[0035] The 5GC **190** may include a Access and Mobility Management Function (AMF) **192**, other AMFs **193**, a Session Management Function (S1VIF) **194**, and a User Plane Function (UPF) **195**. The AMF **192** may be in communication with a Unified Data Management (UDM) **196**. The AMF **192** is the control node that processes the signaling between the UEs **104** and the 5GC **190**. Generally, the AMF **192** provides QoS flow and session management. All user Internet protocol (IP) packets are transferred through the UPF **195**. The UPF **195** provides UE IP address allocation as well as other functions. The UPF **195** is connected to the IP Services **197**. The IP Services **197** may include the Internet, an intranet, an IP Multimedia Subsystem (IMS), a PS Streaming Service, and/or other IP services.

[0036] The base station may also be referred to as a gNB, Node B, evolved Node B (eNB), an access point, a base transceiver station, a radio base station, a radio transceiver, a transceiver function, a basic service set (B SS), an extended service set (ESS), a transmit reception point (TRP), or some other suitable terminology. The base station **102** provides an access point to the EPC **160** or 5GC **190** for a UE **104**. Examples of UEs **104** include a cellular phone, a smart phone, a session initiation protocol (SIP) phone, a laptop, a personal digital assistant (PDA), a satellite radio, a global positioning system, a multimedia device, a video device, a digital audio player (e.g., MP3 player), a camera, a game console, a tablet, a smart device, a wearable device, a vehicle, an electric meter, a gas pump, a large or small kitchen appliance, a healthcare device, an implant, a sensor/actuator, a display, or any other similar functioning device. Some of the UEs **104** may be referred to as IoT devices (e.g., parking meter, gas pump, toaster, vehicles, heart monitor, etc.). The UE **104** may also be referred to as a station, a mobile station, a subscriber station, a mobile unit, a subscriber unit, a wireless unit, a remote unit, a mobile device, a wireless device, a wireless communications device, a remote device, a mobile subscriber station, an access terminal, a mobile terminal, a wireless terminal, a remote terminal, a handset, a user agent, a mobile client, a client, or some other suitable terminology.

[0037] Referring again to FIG. **1**, in certain aspects, the UE **104** may comprise an indication component **198** configured to determine whether an indication corresponding to a COT is received from a base station, wherein the indication is for at least one of a set of CORESETs, a set of QCL assumptions, a set of UL resources, or a set of spatial relations for determining a default beam and to determine the default beam from the base station for use during the COT based on the indication if the indication is received from the base station. The UE **104** may be configured to transmit or receive a transmission using the default beam.

[0038] Referring again to FIG. **1**, in certain aspects, the base station **102**/**180** may comprise an indication component **199** configured to indicate, to a UE, at least one of a set of CORESETs, a set of QCL, a set of UL resources, or a set of spatial relations for determining a default beam, the indication being for use in determining a default beam COT. The base station **102**/**180** may be configured to transmit or receive communication with the UE based on the default beam

[0039] FIG. **2**A is a diagram **200** illustrating an example of a first subframe within a 5G/NR frame structure. FIG. **2**B is a diagram **230** illustrating an example of DL channels within a 5G/NR subframe. FIG. **2**C is a diagram **250** illustrating an example of a second subframe within a 5G/NR frame structure. FIG. **2**D is a diagram **280** illustrating an example of UL channels within a 5G/NR subframe. The 5G/NR frame structure may be frequency division duplex (FDD) in which for a particular set of subcarriers (carrier system bandwidth), subframes within the set of subcarriers are dedicated for either DL or UL, or may be time division duplex (TDD) in which for a particular set of subcarriers (carrier system bandwidth), subframes within the set of subcarriers are dedicated for both DL and UL. In the examples provided by FIGS. **2**A, **2**C, the 5G/NR frame structure is assumed to be TDD, with subframe **4** being configured with slot format **28** (with mostly DL), where D is DL, U is UL, and X is flexible for use between DL/UL, and subframe **3** being configured with slot format **34** (with mostly UL). While subframes **3**, **4** are shown with slot formats **34**, **28**, respectively, any particular subframe may be configured with any of the various available slot formats **0**-**61**. Slot formats **0**, **1** are all DL, UL, respectively. Other slot formats **2**-**61** include a mix of DL, UL, and flexible symbols. UEs are configured with the slot format (dynamically through DL control information (DCI), or semi-statically/statically through radio resource control (RRC) signaling) through a received slot format indicator (SFI). Note that the description infra applies also to a 5G/NR frame structure that is TDD.

[0040] Other wireless communication technologies may have a different frame structure and/or different channels. A frame (10 ms) may be divided into 10 equally sized subframes (1 ms). Each subframe may include one or more time slots. Subframes may also include mini-slots, which may include 7, 4, or 2 symbols. Each slot may include 7 or 14 symbols, depending on the slot configuration. For slot configuration **0**, each slot may include 14 symbols, and for slot configuration **1**, each slot may include 7 symbols. The symbols on DL may be cyclic prefix (CP) orthogonal frequency division multiplex (OFDM) (CP-OFDM) symbols. The symbols on UL may be CP-OFDM symbols (for high throughput scenarios) or discrete Fourier transform (DFT) spread OFDM (DFT-s-OFDM) symbols (also referred to as single carrier frequency-division multiple access (SC-FDMA) symbols) (for power limited scenarios; limited to a single stream transmission). The number of slots within a subframe is based on the slot configuration and the numerology. For slot configuration **0**, different numerologies μ **0** to **5** allow for 1, 2, 4, 8, 16, and 32 slots, respectively, per subframe. For slot configuration **1**, different numerologies **0** to **2** allow for 2, 4, and 8 slots, respectively, per subframe. Accordingly, for slot configuration **0** and numerology there are 14 symbols/slot and 211 slots/subframe. The subcarrier spacing and symbol length/duration are a function of the numerology. The subcarrier spacing may be equal to 2^{μ}*15 kKz, where μ is the numerology **0** to **5**. As such, the numerology μ=0 has a subcarrier spacing of 15 kHz and the numerology μ=5 has a subcarrier spacing of 480 kHz. The symbol length/duration is inversely related to the subcarrier spacing. FIGS. **2**A-**2**D provide an example of slot configuration **0** with 14 symbols per slot and numerology μ=0 with 1 slot per subframe. The subcarrier spacing is 15 kHz and symbol duration is approximately 66.7 μs.

[0041] A resource grid may be used to represent the frame structure. Each time slot includes a resource block (RB) (also referred to as physical RBs (PRBs)) that extends 12 consecutive subcarriers. The resource grid is divided into multiple resource elements (REs). The number of bits carried by each RE depends on the modulation scheme.

[0042] As illustrated in FIG. **2**A, some of the REs carry reference (pilot) signals (RS) for the UE. The RS may include demodulation RS (DM-RS) (indicated as R_x for one particular configuration, where 100× is the port number, but other DM-RS configurations are possible) and channel state information reference signals (CSI-RS) for channel estimation at the UE. The RS may also include beam measurement RS (BRS), beam refinement RS (BRRS), and phase tracking RS (PT-RS).

[0043] FIG. **2**B illustrates an example of various DL channels within a subframe of a frame. The physical downlink control channel (PDCCH) carries DCI within one or

more control channel elements (CCEs), each CCE including nine RE groups (REGs), each REG including four consecutive REs in an OFDM symbol. A primary synchronization signal (PSS) may be within symbol **2** of particular subframes of a frame. The PSS is used by a UE **104** to determine subframe/symbol timing and a physical layer identity. A secondary synchronization signal (SSS) may be within symbol **4** of particular subframes of a frame. The SSS is used by a UE to determine a physical layer cell identity group number and radio frame timing. Based on the physical layer identity and the physical layer cell identity group number, the UE can determine a physical cell identifier (PCI). Based on the PCI, the UE can determine the locations of the aforementioned DM-RS. The physical broadcast channel (PBCH), which carries a master information block (MIB), may be logically grouped with the PSS and SSS to form a synchronization signal (SS)/PBCH block. The MIB provides a number of RBs in the system bandwidth and a system frame number (SFN). The physical downlink shared channel (PDSCH) carries user data, broadcast system information not transmitted through the PBCH such as system information blocks (SIBs), and paging messages.

[0044] As illustrated in FIG. **2**C, some of the REs carry DM-RS (indicated as R for one particular configuration, but other DM-RS configurations are possible) for channel estimation at the base station. The UE may transmit DM-RS for the physical uplink control channel (PUCCH) and DM-RS for the physical uplink shared channel (PUSCH). The PUSCH DM-RS may be transmitted in the first one or two symbols of the PUSCH. The PUCCH DM-RS may be transmitted in different configurations depending on whether short or long PUCCHs are transmitted and depending on the particular PUCCH format used. Although not shown, the UE may transmit sounding reference signals (SRS). The SRS may be used by a base station for channel quality estimation to enable frequency-dependent scheduling on the UL.

[0045] FIG. **2**D illustrates an example of various UL channels within a subframe of a frame. The PUCCH may be located as indicated in one configuration. The PUCCH carries uplink control information (UCI), such as scheduling requests, a channel quality indicator (CQI), a precoding matrix indicator (PMI), a rank indicator (RI), and hybrid automatic repeat request (HARD) acknowledgement (ACK)/not-acknowledgement (NACK) feedback. The PUSCH carries data, and may additionally be used to carry a buffer status report (B SR), a power headroom report (PHR), and/or UCI.

[0046] FIG. **3** is a block diagram of a base station **310** in communication with a UE **350** in an access network. In the DL, IP packets from the EPC **160** may be provided to a controller/processor **375**. The controller/processor **375** implements layer **3** and layer **2** functionality. Layer **3** includes a radio resource control (RRC) layer, and layer **2** includes a packet data convergence protocol (PDCP) layer, a radio link control (RLC) layer, and a medium access control (MAC) layer. The controller/processor **375** provides RRC layer functionality associated with broadcasting of system information (e.g., MIB, SIBs), RRC connection control (e.g., RRC connection paging, RRC connection establishment, RRC connection modification, and RRC connection release), inter radio access technology (RAT) mobility, and measurement configuration for UE measurement reporting; PDCP layer functionality associated with header compression/decompression, security (ciphering, deciphering, integrity protection, integrity verification), and handover support functions; RLC layer functionality associated with the transfer of upper layer packet data units (PDUs), error correction through ARQ, concatenation, segmentation, and reassembly of RLC service data units (SDUs), re-segmentation of RLC data PDUs, and reordering of RLC data PDUs; and MAC layer functionality associated with mapping between logical channels and transport channels, multiplexing of MAC SDUs onto transport blocks (TBs), demultiplexing of MAC SDUs from TBs, scheduling information reporting, error correction through HARQ, priority handling, and logical channel prioritization.

[0047] The transmit (TX) processor **316** and the receive (RX) processor **370** implement layer **1** functionality associated with various signal processing functions. Layer **1**, which includes a physical (PHY) layer, may include error detection on the transport channels, forward error correction (FEC) coding/decoding of the transport channels, interleaving, rate matching, mapping onto physical channels, modulation/demodulation of physical channels, and MIMO antenna processing. The TX processor **316** handles mapping to signal constellations based on various modulation schemes (e.g., binary phase-shift keying (BPSK), quadrature phase-shift keying (QPSK), M-phase-shift keying (M-PSK), M-quadrature amplitude modulation (M-QAM)). The coded and modulated symbols may then be split into parallel streams. Each stream may then be mapped to an OFDM subcarrier, multiplexed with a reference signal (e.g., pilot) in the time and/or frequency domain, and then combined together using an Inverse Fast Fourier Transform (IFFT) to produce a physical channel carrying a time domain OFDM symbol stream. The OFDM stream is spatially precoded to produce multiple spatial streams. Channel estimates from a channel estimator **374** may be used to determine the coding and modulation scheme, as well as for spatial processing. The channel estimate may be derived from a reference signal and/or channel condition feedback transmitted by the UE **350**. Each spatial stream may then be provided to a different antenna **320** via a separate transmitter **318**TX. Each transmitter **318**TX may modulate an RF carrier with a respective spatial stream for transmission.

[0048] At the UE **350**, each receiver **354**RX receives a signal through its respective antenna **352**. Each receiver **354**RX recovers information modulated onto an RF carrier and provides the information to the receive (RX) processor **356**. The TX processor **368** and the RX processor **356** implement layer **1** functionality associated with various signal processing functions. The RX processor **356** may perform spatial processing on the information to recover any spatial streams destined for the UE **350**. If multiple spatial streams are destined for the UE **350**, they may be combined by the RX processor **356** into a single OFDM symbol stream. The RX processor **356** then converts the OFDM symbol stream from the time-domain to the frequency domain using a Fast Fourier Transform (FFT). The frequency domain signal comprises a separate OFDM symbol stream for each subcarrier of the OFDM signal. The symbols on each subcarrier, and the reference signal, are recovered and demodulated by determining the most likely signal constellation points transmitted by the base station **310**. These soft decisions may be based on channel estimates computed by the channel estimator **358**. The soft decisions are then decoded and deinterleaved to recover the data and control signals that were originally transmitted by the base

station **310** on the physical channel. The data and control signals are then provided to the controller/processor **359**, which implements layer **3** and layer **2** functionality.

[0049] The controller/processor **359** can be associated with a memory **360** that stores program codes and data. The memory **360** may be referred to as a computer-readable medium. In the UL, the controller/processor **359** provides demultiplexing between transport and logical channels, packet reassembly, deciphering, header decompression, and control signal processing to recover IP packets from the EPC **160**. The controller/processor **359** is also responsible for error detection using an ACK and/or NACK protocol to support HARQ operations.

[0050] Similar to the functionality described in connection with the DL transmission by the base station **310**, the controller/processor **359** provides RRC layer functionality associated with system information (e.g., MIB, SIBs) acquisition, RRC connections, and measurement reporting; PDCP layer functionality associated with header compression/decompression, and security (ciphering, deciphering, integrity protection, integrity verification); RLC layer functionality associated with the transfer of upper layer PDUs, error correction through ARQ, concatenation, segmentation, and reassembly of RLC SDUs, re-segmentation of RLC data PDUs, and reordering of RLC data PDUs; and MAC layer functionality associated with mapping between logical channels and transport channels, multiplexing of MAC SDUs onto TBs, demultiplexing of MAC SDUs from TBs, scheduling information reporting, error correction through HARQ, priority handling, and logical channel prioritization.

[0051] Channel estimates derived by a channel estimator **358** from a reference signal or feedback transmitted by the base station **310** may be used by the TX processor **368** to select the appropriate coding and modulation schemes, and to facilitate spatial processing. The spatial streams generated by the TX processor **368** may be provided to different antenna **352** via separate transmitters **354**TX. Each transmitter **354**TX may modulate an RF carrier with a respective spatial stream for transmission.

[0052] The UL transmission is processed at the base station **310** in a manner similar to that described in connection with the receiver function at the UE **350**. Each receiver **318**RX receives a signal through its respective antenna **320**. Each receiver **318**RX recovers information modulated onto an RF carrier and provides the information to a RX processor **370**.

[0053] The controller/processor **375** can be associated with a memory **376** that stores program codes and data. The memory **376** may be referred to as a computer-readable medium. In the UL, the controller/processor **375** provides demultiplexing between transport and logical channels, packet reassembly, deciphering, header decompression, control signal processing to recover IP packets from the UE **350**. IP packets from the controller/processor **375** may be provided to the EPC **160**. The controller/processor **375** is also responsible for error detection using an ACK and/or NACK protocol to support HARQ operations.

[0054] FIG. **4** depicts a diagram **400** illustrating an example COT **402** for a base station, e.g., for transmitting and/or receiving communication using an unlicensed frequency band. In unlicensed bands where the transmission medium is generally shared among multiple devices (e.g. 60 GHz), the base station may first perform a clear channel assessment (CCA), e.g., at **404**, to determine if the medium is available for use by the base station. If the CCA clears (i.e. the base station is successful in its contention for the medium), the base station may use the channel for the duration of a COT **402** to schedule grants and transmit/receive data with one or more UEs. A CCA may be an assessment of energy received on a radio interface. A lack of energy on the radio interface for a particular channel may indicate that a channel is clear. A CCA idle period may be a period when a device may be idle on the channel so that channel assessment may occur. The COT may be a period when a base station has secured the channel for a transmission, e.g., a data transmission, or when a base station has secured the channel for transmissions by other devices, e.g., a UE. The base station may inform the UE that it controls the medium by transmitting an initial signal (IS) **406** at the beginning of the COT, discussed infra. While the COT **402** in diagram **400**, is illustrated as spanning two slots, two slots is merely one example of a COT duration to illustrate the concept. The COT may span any number of slots **408**. The IS **406** may provide an indication to the UE informing the UE to monitor for further communication from the base station during the COT.

[0055] FIG. **4** also illustrates an example block diagram **420** depicting a base station's transmissions to a UE during the COT **402**. Once the base station successfully performs a CCA **404**, the base station may transmit an IS **406** at the beginning of the COT. The IS **406** informs the UE that the base station has acquired the channel and is able to transmit a grant and/or data to the UE. In one aspect, the IS **406** may include Group Common Physical Downlink Control Channel (GC-PDCCH) information or a reference signal (e.g. a Channel State Information Reference Signal (CSI-RS)). In another aspect, the IS **406** may include control information such as a control resource set (CORESET). The UE decodes the received IS over a decoding period **422**, and the UE may determine that it should monitor the channel for communications from the base station. During the decoding period **422**, the UE does not monitor for communication from the base station. Following the decoding period **422**, the UE may receive a grant for a DL data transmission, receive a grant for an UL data transmission, receive DL data, and/or transmit UL data. For example, the UE may then receive a scheduling grant **424** containing downlink control information (DCI) for DL/UL communication. The corresponding data **428** may be communicated at **426**. There may be an offset **426** between the grant and the corresponding transmission/reception of data **428**. The base station may communicate with a single UE in the COT or may communicate with multiple UEs during the COT. In an example involving communication with multiple UEs, the base station may send UE-specific grants and data during the COT. For example, diagram **420** of FIG. **4** illustrates UE-**1** receiving its own scheduling grant **424** followed after an offset **426** by its corresponding data **428** (either DL or UL data), and UE-**2** receiving its own scheduling grant **430** followed after an offset **432** by its corresponding data **434**.

[0056] In order to receive the communication from the base station, the UE may need to determine a reception beam from among a plurality of potential reception beams. While a UE communicating in the licensed band may simply follow a relationship in which a default reception beam is QCL with a lowest CORESET ID from a latest monitored slot, this relationship may lead to problems when applied in communication in the unlicensed frequency spectrum.

[0057] FIG. **5** illustrates an example block diagram **500** depicting CORESETs IDs **502**, **504**, **506** associated with corresponding resources **512**, **514**, **516** within slots. Each CORESET may indicate where the UE may receive PDCCH transmissions and may include reference signals (e.g. Synchronization Signal Block (SSB), CSI-RS, etc.) corresponding to a particular spatial filter or beam. For example, CORESET **1** **502** may be associated with a beam **522** having a first direction, CORESET **2** **504** may be associated with a beam **524** having a second direction, and CORESET **3** **506** may be associated with a beam **526** having a third direction. Each CORESET may also include a transmission configuration indication (TCI) state which provides information about the antenna ports with which the packet common control channel (PCCCH) antenna ports are quasi co-located. The UE may receive one or more CORESETs from the base station at the beginning of any slot.

[0058] If a UE selects the default UE reception (Rx) beam based on QCL corresponding to the lowest CORESET ID in the latest monitored slot, the selection could lead to the UE using a beam for which CCA was not performed or was not successful. For example, referring to FIG. **5**, if Slot **2** was the latest slot and CORESET **1** had the lowest CORESET ID, then assuming spatial quasi-location between PDCCH and PDSCH antenna ports, the UE may select a default Rx beam to receive data on PDSCH in Slot **2** associated with CORESET **1**, e.g., beam **522**. However, in this example, the base station has not checked beam **1** and will not use CORESET **1** that corresponds to beam **1**. Thus, selection of the subset of CORESET QCL for transmission in a given COT may lead the UE to determine an incorrect default Rx/Tx beam and may degrade communication between the UE and the base station. Similarly, the UE may rely on a QCL assumption for determining a default Rx/Tx beam that is not consistent with the set of QCL assumptions selected by the base station.

[0059] In order to address this problem, a base station may indicate to the UE(s) selected CORESET(s) (e.g., CORESET **2** and CORESET **3** in FIG. **5**) from among the possible CORESETs or selected CORESET QCLs from among the possible QCL assumptions for use in a given COT **402**, e.g., as illustrated at **606** in FIG. **6**. The selection may be based on the beams used by the base station to perform CCA and/or the beams for which CCA was successful. The default beam (e.g., from among beam **1**, beam **2**, beam **3**) may be determined based on the selected subset of CORESETs (CORESET **2**, or CORESET **3**) or selected CORESET QCLs rather than from the entire set of CORESETs or from the entire set of QCL assumptions. A QCL assumption is a relationship that indicates that the Rx/Tx signal will share properties with another signal. For example, the Rx/Tx beam may have a defined relationship to the beam used for another signal, e.g., a reference signal. Thus, the QCL assumption provides the relationship defining the properties that are shared between the Rx/Tx signal and the other signal. There may be a set of potential QCL assumptions, and the base station may select a subset of the QCL assumptions for use in a particular COT. Aspects described herein may include a base station signaling information about the selected CORESET(s) or the selected CORESET QCL(s). Aspects described herein may also include the UE receive the information about the selected CORESET(s) or the selected CORESET QCL(s)and use the information to select a default reception beam for communication with the base station.

[0060] The concept of QCL may be used to improve the channel estimation performance. One channel on one antenna port may be estimated using information about the channel on another antenna port. One antenna port may be considered QCL to another antenna port when they have the same or similar properties. The two antenna ports may have the same or similar properties because they are located near each other in space, oriented the same or similar in space, the antennas used have similar properties, or some combination of these or other aspects of the antennas lead to the antennas having similar properties.

[0061] For example, antennas may be considered to be QCL based on one or more of frequency shift, received power for each antenna port, Doppler spread, Doppler shift, delay spread, average gain, an average delay, received timing, a number of significant channel taps, or some combination of these or other figures of merit related to the antenna ports. For QCL antenna ports, one or more of these figures of merit are the same or similar for each of the antenna ports that are considered QCL. One or more of these properties may be determined based on received reference signals or other received signals.

[0062] FIG. **6** illustrates a diagram **600** of an example communication flow between a base station **602** and a UE **604** including aspects presented herein. The UE may determine whether an indication of a set of CORESET(s) or a set of QCL assumption(s) is received from the base station **602**. If the CORESETs/QCL assumptions selected by the base station are indicated to the UE at **606**, the UE may determine, at **612**, a default reception beam based on the indicated set. For example, the UE may use a default Rx beam based on the lowest CORESET ID from among the indicated set or based on a QCL assumption having a lowest identifier. The selected set of CORESETs/QCL assumptions may be based on beams for which the base station performs CCA and/or succeeds in performing CCA. Following the determination of the default beam, the UE may use the default beam to receive data **610** and/or to transmit data **614**. FIG. **6** also illustrates a grant **608** that may correspond to a grant for DL data **610** or UL data **614**.

[0063] If selected CORESET QCLs are indicated, the CORESETs whose QCLs are not selected may follow one of selected CORESET QCL based on certain rule. For example, if a CORESET with an un-selected QCL is used to transmit to the UE, the data received in connection with the CORESET may be transmitted and/or received based on a QCL of the lowest CORESET ID from among the CORESETs with selected QCLs or from among the selected set of CORESETs. Thus, a default reception beam may follow a QCL relationship with a lowest CORESET ID from among the CORESETs selected by the base station and indicated to the UE at **606**. Likewise, a default reception beam may follow a QCL relationship with a lowest CORESET ID from among the QCL assumptions selected by the base station and indicated to the UE at **606**.

[0064] In addition to indicating a subset of CORESETs/QCL assumptions at **606** for determining a default Rx beam, the base station may also indicate a subset of UL resources and/or a subset of spatial relations for particular signals, at **606**. The indication of a subset of UL resources and/or subset of spatial relations for particular signals may be used

by the UE, at **612**, to determine a default transmission beam, e.g., to transmit data **614**. The UL resources indicated at **606** may include any of SRS, PUCCH, and/or PUSCH. The spatial relations that may be indicated to the UE, at **606**, can include those used for SRS/PUCCH/PUSCH, and default Tx beam that is determined at **612** can be used for PUCCH/PUSCH/SRS. For example, a base station can indicate, at **606**, a subset of PUCCH resources, e.g., selected Tx beams, whose beams are allowed by listen before talk (LBT) or CCA in abase station initiated COT. A Tx beam of PUSCH scheduled by DCI format 0_0 in the COT may follow Tx beam of lowest PUCCH resource among the subset of selected PUCCH resources in an active bandwidth part (BWP).

[0065] The indication **606** may be made to the UE in any of a number of ways. For example, the base station may explicitly signal the selected CORESETs, QCL assumptions, UL resources, and/or spatial relations to the UE. A base station may explicitly signal CORESETs or CORESET QCLs in PDCCH, such as in a group common PDCCH at the beginning of COT. For example, the indication of a set of CORESETs selected from a plurality of CORESETS or a set of QCL assumptions selected from a plurality of QCL assumptions may include signaling identifying the set of CORESETS or the set of QCL assumptions. The indication may be included in a control channel received in the at least one COT.

[0066] In another example, the indication may be implicitly signaled to the UE. For example, the base station may signal such information to the UE in CSI-RS resources with the same QCLs as the selected CORESET(s)/QCL assumptions. The CSI-RS resources may be at the beginning of a COT, so that the UE can determine the beam(s) for use during the COT.

[0067] FIG. **7** is a flowchart **700** of a method of wireless communication. The method may be performed by a UE or a component of a UE (e.g., the UE **104**, **350**, **604**, **1150**; the apparatus **802**/**802'**; the processing system **914**, which may include the memory **360** and which may be the entire UE **350** or a component of the UE **350**, such as the TX processor **368**, the RX process or **356**, and/or the controller/processor **359**). According to various aspects, one or more of the illustrated operations of the method of flowchart **700** may be omitted, transposed, and/or contemporaneously performed. The UE may implement the method of diagram **600**. The method may enable a UE to more accurately determine a default beam when communicating with a base station using beamforming over an unlicensed spectrum.

[0068] At **706**, the UE determines whether an indication corresponding to a COT is received from a base station. For example, **706** may be performed by indication component **808** of apparatus **802**. In some aspects, the indication may be for at least one of a set of CORESETs, a set of QCL assumptions, a set of UL resources, or a set of spatial relations for determining a default beam.

[0069] At **708**, the UE determines the default beam from the base station for use during the COT. For example, **708** may be performed by default beam component **810** of apparatus **802**. In some aspects, the UE determines the default beam from the base station for use during the COT based on the indication if the indication is received from the base station. Otherwise, the UE may determine the default beam in another manner at **714**.

[0070] The UE may then communicate during the COT using the default beam. In some aspects, for example, at **710**, the UE may transmit a transmission using the default beam. For example, **710** may be performed by transmission component **806** of apparatus **802**. In some aspects, for example, at **712**, the UE may receive a transmission using the default beam. For example, **712** may be performed by reception component **804** of apparatus **802**.

[0071] In some aspects, for example, at **702**, the UE may receive the indication of the set of CORESETs or of the set of QCL assumptions. For example, **702** may be performed by reception component **804** of apparatus **802**. In some aspects, the default beam may comprise a default reception beam that may be selected based on a lowest CORESET identifier (ID) from among the set of CORESETs or the set of QCL assumptions. In some aspects, for a CORESET that is not comprised in the set of CORESETs, the UE may determine the default beam based on a lowest CORESET ID from among the set of CORESETs or the set of QCL assumptions.

[0072] In some aspects, for example, at **704**, the UE may receive the indication of the set of UL resources or the set of spatial relations for determining the default beam. For example, **704** may be performed by reception component **804** of apparatus **802**. In some aspects, the default beam may comprise a default transmission beam that may be selected based on the indication of the set of UL resources or the set of spatial relations for determining the default beam. The UL resources may correspond to at least one of a Sounding Reference Signal (SRS), an uplink control channel, or an uplink data channel. The spatial relations for determining the default beam may comprise spatial relations for selecting at least one of a Sounding Reference Signal (SRS), an uplink control channel, or an uplink data channel for an uplink transmission from the UE. The indication may comprise UL resources for a first uplink channel, and wherein the UE determines the default beam for a second uplink channel based on a beam used for the first uplink channel.

[0073] FIG. **8** is a conceptual data flow diagram **800** illustrating the data flow between different means/components in an exemplary apparatus **802**. The apparatus may be a UE or a component of a UE. The apparatus may perform the method of flowchart **700**. The apparatus includes an indication component **808** configured to determine whether an indication corresponding to a COT is received from a base station, wherein the indication is for at least one of a set of CORESETs, a set of QCL assumptions, a set of UL resources, or a set of spatial relations for determining a default beam, e.g., as described in connection with **706** of FIG. **7**. The apparatus comprises a default beam component **810** configured to determine the default beam from the base station for use during the COT based on the indication if the indication is received from the base station, e.g., as described in connection with **708** of FIG. **7**. The reception component **804** is configured to receive receiving a transmission from base station **850** using the default beam, e.g., as discussed in connection with **712** of FIG. **7**. The transmission component **806** is configured to transmit a transmission using the default beam, e.g., as discussed in connection with **710** of FIG. **7**. The indication component **808** may be configured to receive the indication of the set of CORESETs or of the set of QCL assumptions, wherein the default beam comprises a default reception beam that is selected based on a lowest CORESET ID from among the

set of CORESETs or the set of QCL assumptions, e.g., as discussed in connection with **702** of FIG. **7**. The indication component **808** may be configured to receive the indication of the set of CORESETs or of the set of QCL assumptions, wherein for a CORESET that is not comprised in the set of CORESETs, the UE determines the default beam based on a lowest CORESET identifier ID from among the set of CORESETs or the set of QCL assumptions, e.g., as discussed in connection with **702** of FIG. **7**. The indication component **808** may be configured to receive the indication of the set of UL resources or the set of spatial relations for determining the default beam, wherein the default beam comprises a default transmission beam that is selected based on the indication of the set of UL resources or the set of spatial relations for determining the default beam, e.g., as discussed in connection with **704** of FIG. **7**.

[0074] The apparatus may include additional components that perform each of the blocks of the algorithm in the aforementioned flowcharts of FIGS. **6** and **7**. As such, each block in the aforementioned flowcharts of FIGS. **6** and **7** may be performed by a component and the apparatus may include one or more of those components. The components may be one or more hardware components specifically configured to carry out the stated processes/algorithm, implemented by a processor configured to perform the stated processes/algorithm, stored within a computer-readable medium for implementation by a processor, or some combination thereof.

[0075] FIG. **9** is a diagram **900** illustrating an example of a hardware implementation for an apparatus **802'** employing a processing system **914**. The processing system **914** may be implemented with a bus architecture, represented generally by the bus **924**. The bus **924** may include any number of interconnecting buses and bridges depending on the specific application of the processing system **914** and the overall design constraints. The bus **924** links together various circuits including one or more processors and/or hardware components, represented by the processor **904**, the components **804**, **806**, **808**, **810** and the computer-readable medium/memory **906**. The bus **924** may also link various other circuits such as timing sources, peripherals, voltage regulators, and power management circuits, which are well known in the art, and therefore, will not be described any further.

[0076] The processing system **914** may be coupled to a transceiver **910**. The transceiver **910** is coupled to one or more antennas **920**. The transceiver **910** provides a means for communicating with various other apparatus over a transmission medium. The transceiver **910** receives a signal from the one or more antennas **920**, extracts information from the received signal, and provides the extracted information to the processing system **914**, specifically the reception component **804**. In addition, the transceiver **910** receives information from the processing system **914**, specifically the transmission component **806**, and based on the received information, generates a signal to be applied to the one or more antennas **920**. The processing system **914** includes a processor **904** coupled to a computer-readable medium/memory **906**. The processor **904** is responsible for general processing, including the execution of software stored on the computer-readable medium/memory **906**. The software, when executed by the processor **904**, causes the processing system **914** to perform the various functions described supra for any particular apparatus. The computer-readable medium/memory **906** may also be used for storing data that is manipulated by the processor **904** when executing software. The processing system **914** further includes at least one of the components **804**, **806**, **808**, **810**. The components may be software components running in the processor **904**, resident/stored in the computer readable medium/memory **906**, one or more hardware components coupled to the processor **904**, or some combination thereof. The processing system **914** may be a component of the UE **350** and may include the memory **360** and/or at least one of the TX processor **368**, the RX processor **356**, and the controller/processor **359**.

[0077] In one configuration, the apparatus **802/802'** for wireless communication includes means for determining whether an indication corresponding to a COT is received from a base station. The indication is for at least one of a set of CORESETs, a set of QCL assumptions, a set of UL resources, or a set of spatial relations for determining a default beam. The apparatus includes means for determining the default beam from the base station for use during the COT based on the indication when the indication is received from the base station. The apparatus includes means for transmitting or receiving a transmission using the default beam. The apparatus further includes means for receiving the indication of the set of CORESETs or of the set of QCL assumptions. The default beam comprising a default reception beam that is selected based on a lowest CORESET ID from among the set of CORESETs or the set of QCL assumptions. The apparatus further includes means for receiving the indication of the set of CORESETs or of the set of QCL assumptions. For a CORESET that is not comprised in the set of CORESETs, the UE determines the default beam based on a lowest CORESET ID from among the set of CORESETs or the set of QCL assumptions. The apparatus further includes means for receiving the indication of the set of uplink resources or the set of spatial relations for determining the default beam. The default beam comprising a default transmission beam that is selected based on the indication of the set of uplink resources or the set of spatial relations for determining the default beam. The aforementioned means may be one or more of the aforementioned components of the apparatus **802** and/or the processing system **914** of the apparatus **802'** configured to perform the functions recited by the aforementioned means. As described supra, the processing system **914** may include the TX Processor **368**, the RX Processor **356**, and the controller/processor **359**. As such, in one configuration, the aforementioned means may be the TX Processor **368**, the RX Processor **356**, and the controller/processor **359** configured to perform the functions recited by the aforementioned means.

[0078] FIG. **10** is a flowchart **1000** of a method of wireless communication. The method may be performed by a base station or a component of a base station (e.g., the base station **102**, **180**, **310**, **602**, **850**; the apparatus **1102/1102'**; the processing system **1214**, which may include the memory **376** and which may be the entire base station **310** or a component of the base station **310**, such as the TX processor **316**, the RX processor **370**, and/or the controller/processor **375**). According to various aspects, one or more of the illustrated operations of the method of flowchart **1000** may be omitted, transposed, and/or contemporaneously performed. The UE may implement the method of diagram **600**. The method may enable a UE to more accurately determine

a default beam when communicating with a base station using beamforming over an unlicensed spectrum.

[0079] At **1002**, the base station transmits, to a UE, an indication of at least one of a set of CORESETs, a set of QCL assumptions, a set of UL resources, or a set of spatial relations for determining a default beam. For example, **1002** may be performed by indication component **1108** of apparatus **1102**. In some aspects, the indication may be used in determining a default beam for use in a COT. An example indication **606** is described in connection with FIG. **6**. The indication may be based on a CCA performed by the base station. In some aspects, the indication may indicate the set of CORESETs. In some aspects, the indication indicates the set of QCL assumptions. The default beam may be determined to be a default reception beam. In some aspects, the indication indicates the set of uplink resources. The default beam may comprise a default transmission beam. The uplink resources may comprise at least one of a SRS, an uplink control channel, or an uplink data channel. The indication may indicate the set of spatial relations for determining the default beam, and the default beam may comprise a default transmission beam. In some aspects, the set of spatial relations for determining the default beam comprise spatial relations for selecting at least one of a SRS, an uplink control channel, or an uplink data channel. In some aspects, the indication may comprise uplink resources for a first uplink channel, and the default beam for a second uplink channel may be indicated based on a beam used for the first uplink channel.

[0080] At **1004**, the base station may transmit a transmission to the UE based on the default beam based on the indication transmitted at **1002**. For example, **1004** may be performed by transmission component **1106** of apparatus **1102**. In some aspects, the indication may indicate the set of CORESETs, and may provide the UE with information to determine a default reception beam. In some aspects, the indication may indicate the set of QCL assumptions, and may provide the UE with information to determine a default reception beam.

[0081] At **1006**, the base station may receive a transmission from the UE based on a default beam based on the indication transmitted at **1002**. For example, **1006** may be performed by reception component **1104** of apparatus **1102**. In some aspects, the indication may indicate the set of UL resources, and may provide the UE with information to determine a default transmission beam. The UL resources may comprise at least one of an SRS, an uplink control channel, or an uplink data channel. As another example, the indication may indicate the set of spatial relations for determining a default transmission beam. The spatial relations for determining the default beam may comprise spatial relations for selecting at least one of an SRS, an uplink control channel, or an uplink data channel. The indication may comprise UL resources for a first uplink channel, and wherein the default beam for a second uplink channel is indicated based on a beam used for the first uplink channel.

[0082] FIG. **11** is a conceptual data flow diagram **1100** illustrating the data flow between different means/components in an exemplary apparatus **1102**. The apparatus may be a base station or a component of a base station. The apparatus may perform the method of flowchart **1000**. The apparatus includes an indication component **1108** configured to transmit, to a UE (e.g. UE **1150**), an indication of at least one of a set of CORESETs, a set of QCL assumptions, a set of UL resources, or a set of spatial relations for determining a default beam, the indication being for use in determining a default beam for use in a COT, e.g., as described in connection with **1002** of FIG. **10**. The apparatus includes a reception component **1104** configured to receive a transmission from the UE based on the default beam, e.g., as described in connection with **1006** of FIG. **10**. The apparatus includes a transmission component **1106** configured to transmit a transmission to the UE based on the default beam, e.g., as described in connection with **1004** of FIG. **10**.

[0083] The apparatus may include additional components that perform each of the blocks of the algorithm in the aforementioned flowcharts of FIGS. **6** and **10**. As such, each block in the aforementioned flowcharts of FIGS. **6** and **10** may be performed by a component and the apparatus may include one or more of those components. The components may be one or more hardware components specifically configured to carry out the stated processes/algorithm, implemented by a processor configured to perform the stated processes/algorithm, stored within a computer-readable medium for implementation by a processor, or some combination thereof.

[0084] FIG. **12** is a diagram **1200** illustrating an example of a hardware implementation for an apparatus **1102'** employing a processing system **1214**. The processing system **1214** may be implemented with a bus architecture, represented generally by the bus **1224**. The bus **1224** may include any number of interconnecting buses and bridges depending on the specific application of the processing system **1214** and the overall design constraints. The bus **1224** links together various circuits including one or more processors and/or hardware components, represented by the processor **1204**, the components **1104**, **1106**, **1108**, and the computer-readable medium/memory **1206**. The bus **1224** may also link various other circuits such as timing sources, peripherals, voltage regulators, and power management circuits, which are well known in the art, and therefore, will not be described any further.

[0085] The processing system **1214** may be coupled to a transceiver **1210**. The transceiver **1210** is coupled to one or more antennas **1220**. The transceiver **1210** provides a means for communicating with various other apparatus over a transmission medium. The transceiver **1210** receives a signal from the one or more antennas **1220**, extracts information from the received signal, and provides the extracted information to the processing system **1214**, specifically the reception component **1104**. In addition, the transceiver **1210** receives information from the processing system **1214**, specifically the transmission component **1106**, and based on the received information, generates a signal to be applied to the one or more antennas **1220**. The processing system **1214** includes a processor **1204** coupled to a computer-readable medium/memory **1206**. The processor **1204** is responsible for general processing, including the execution of software stored on the computer-readable medium/memory **1206**. The software, when executed by the processor **1204**, causes the processing system **1214** to perform the various functions described supra for any particular apparatus. The computer-readable medium/memory **1206** may also be used for storing data that is manipulated by the processor **1204** when executing software. The processing system **1214** further includes at least one of the components **1104**, **1106**, **1108**. The components may be software components running in the processor **1204**, resident/stored in the computer readable medium/

memory **1206**, one or more hardware components coupled to the processor **1204**, or some combination thereof. The processing system **1214** may be a component of the base station **310** and may include the memory **376** and/or at least one of the TX processor **316**, the RX processor **370**, and the controller/processor **375**

[0086] In one configuration, the apparatus **1102**/**1102'** for wireless communication includes means for sending, to a UE, an indication of at least one of a set of CORESETs, a set of QCL assumptions, a set of UL resources, or a set of spatial relations for determining a default beam. The indication being for use in determining a default beam for use in a COT. The apparatus includes means for transmitting a transmission to the UE based on the default beam. The apparatus includes means for receiving a transmission from the UE based on the default beam. The aforementioned means may be one or more of the aforementioned components of the apparatus **1102** and/or the processing system **1214** of the apparatus **1102'** configured to perform the functions recited by the aforementioned means. As described supra, the processing system **1214** may include the TX Processor **316**, the RX Processor **370**, and the controller/processor **375**. As such, in one configuration, the aforementioned means may be the TX Processor **316**, the RX Processor **370**, and the controller/processor **375** configured to perform the functions recited by the aforementioned means.

[0087] The present disclosure relates to communication enhancements between the base station and the UE through the base station indicating to the UE which CORESET(s) or QCL assumptions are selected for a COT. The UE may use the indication to determine a default beam for the communication. In addition, the base station may indicate selected uplink (UL) resources or spatial relationships for the COT that the UE may use to determine a default beam. At least one advantage of the disclosure is that the UE may be configured to more accurately determine a default beam when communicating with a base station using beamforming over an unlicensed spectrum.

[0088] It is understood that the specific order or hierarchy of blocks in the processes/flowcharts disclosed is an illustration of exemplary approaches. Based upon design preferences, it is understood that the specific order or hierarchy of blocks in the processes/flowcharts may be rearranged. Further, some blocks may be combined or omitted. The accompanying method claims present elements of the various blocks in a sample order, and are not meant to be limited to the specific order or hierarchy presented.

[0089] The previous description is provided to enable any person skilled in the art to practice the various aspects described herein. Various modifications to these aspects will be readily apparent to those skilled in the art, and the generic principles defined herein may be applied to other aspects. Thus, the claims are not intended to be limited to the aspects shown herein, but is to be accorded the full scope consistent with the language claims, wherein reference to an element in the singular is not intended to mean "one and only one" unless specifically so stated, but rather "one or more." The word "exemplary" is used herein to mean "serving as an example, instance, or illustration." Any aspect described herein as "exemplary" is not necessarily to be construed as preferred or advantageous over other aspects. Unless specifically stated otherwise, the term "some" refers to one or more. Combinations such as "at least one of A, B, or C," "one or more of A, B, or C," "at least one of A, B, and C," "one or more of A, B, and C," and "A, B, C, or any combination thereof" include any combination of A, B, and/or C, and may include multiples of A, multiples of B, or multiples of C. Specifically, combinations such as "at least one of A, B, or C," "one or more of A, B, or C," "at least one of A, B, and C," "one or more of A, B, and C," and "A, B, C, or any combination thereof" may be A only, B only, C only, A and B, A and C, B and C, or A and B and C, where any such combinations may contain one or more member or members of A, B, or C. All structural and functional equivalents to the elements of the various aspects described throughout this disclosure that are known or later come to be known to those of ordinary skill in the art are expressly incorporated herein by reference and are intended to be encompassed by the claims. Moreover, nothing disclosed herein is intended to be dedicated to the public regardless of whether such disclosure is explicitly recited in the claims. The words "module," "mechanism," "element," "device," and the like may not be a substitute for the word "means." As such, no claim element is to be construed as a means plus function unless the element is expressly recited using the phrase "means for."

What is claimed is:

1. A method of wireless communication at a User Equipment (UE), comprising:

receiving, from a base station, an indication corresponding to a Channel Occupancy Time (COT), wherein the indication is for at least one of a set of Control Resource Sets (CORESETs), a set of Quasi co-location (QCL) assumptions, a set of uplink resources, or a set of spatial relations for determining a default beam;

determining the default beam from the base station for use during the COT based on the indication; and

transmitting or receiving a transmission using the default beam.

* * * * *