MIYO
...for a smart garden

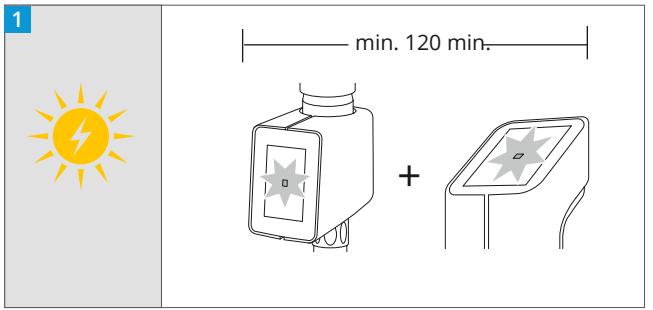

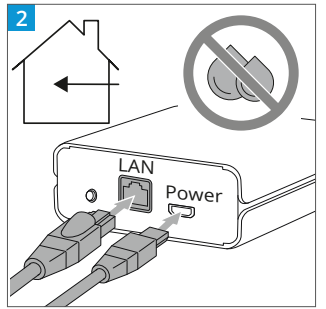

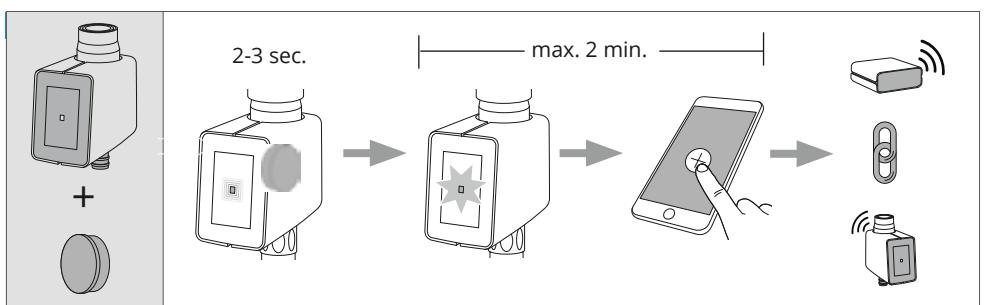

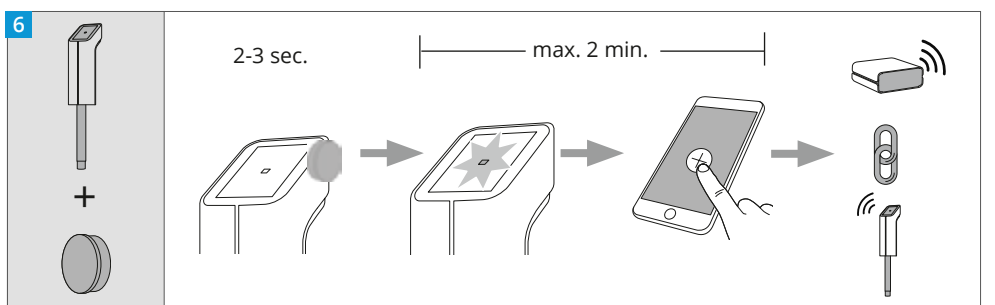

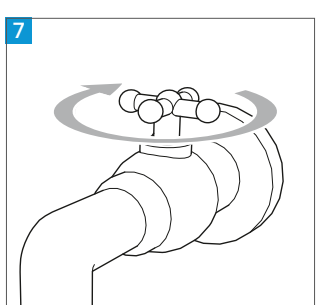

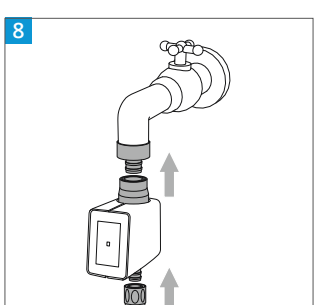

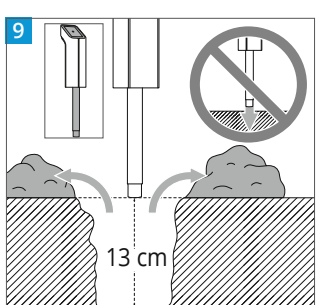

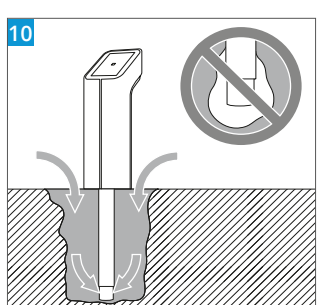

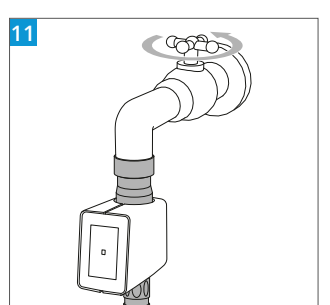

www.miyo.garden/service | © Nauticast GmbH 2023